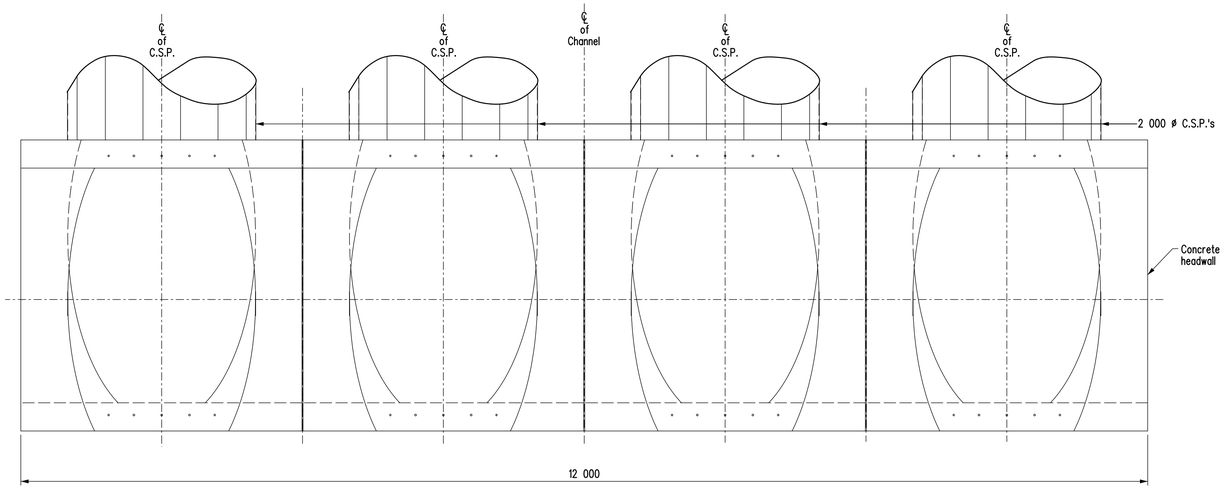

PART PLAN

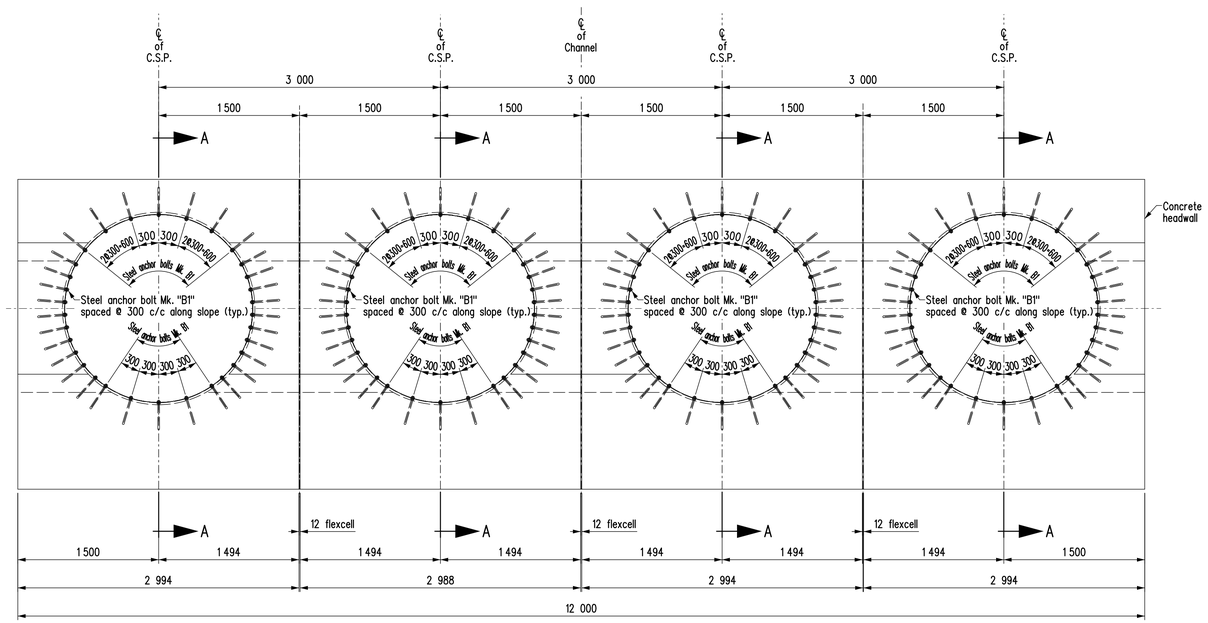

ELEVATION

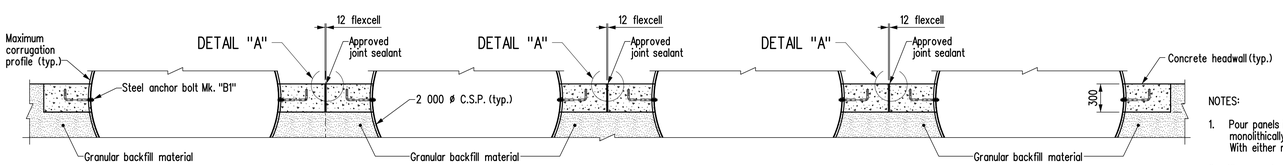

SECTION B-B

DESIGN DATA

SPECIFICATIONS

AASHTO LRFD BRIDGE DESIGN SPECIFICATIONS, SEVENTH EDITION, 2014

STRUCTURAL CONCRETE

COMPRESSIVE STRENGTH f'c = 35 MPa

CEMENT — CSA A23.1, CLASS C-1
EXPOSURE CLASS — AIR CATEGORY 1

REINFORCING STEEL — CAN/CSA G30.18-M92 GRADE 400W
CLEAR COVER — 50 mm (UNLESS NOTED OTHERWISE)

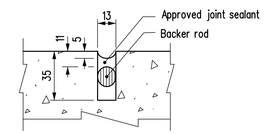

ALTERNATE JOINT DETAIL "A"

Centered between C.S.P.'S
Scale 1:2

BILL OF MISCELLANEOUS METAL

MARK No.	No.	DESCRIPTION	CORROSION PROTECTION	SIZE	LENGTH	REMARKS	MASS PER UNIT	MASS
B1	256	Steel anchor bolt Grade A36 or 307	Hot dip galvanized	19 dia.	406	As detailed, c/w 2 hex nuts Grade C & 2 flat washers	1.138	291.33
							TOTAL MASS kg =	291.33

NOTES:

1. All material noted in the above Bill shall be hot dip galvanized after fabrication in accordance with CSA G164 for a minimum net retention of 610 g/m^2 unless otherwise stated in the specified material ASTM standards. The fabricator and galvanizer shall safeguard against embrittlement using recommended practices from applicable standards.
2. Grade C galvanized nuts for A36/307 bolts shall be overtapped to the minimum amount required for the fastener assembly in accordance with ASTM A563.
3. All bolts and threaded rods in the above Bill shall be Imperial thread.

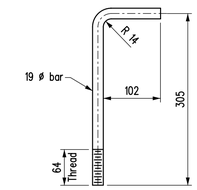

STEEL ANCHOR BOLT Mk. "B1"

Scale 1:5

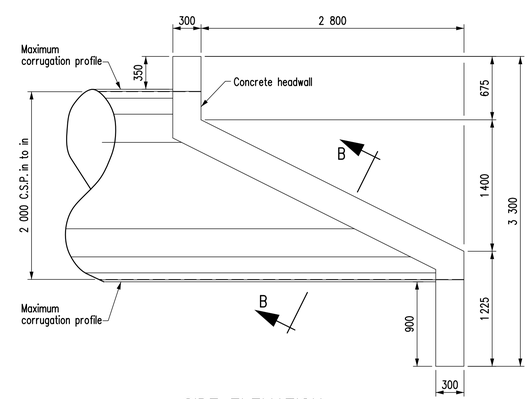

SIDE ELEVATION

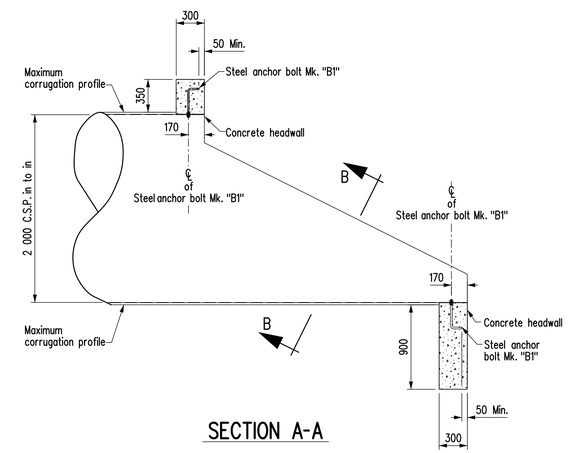

SECTION A-A

NOTES:

1. Pour panels independently with 12 mm flexcell joint as shown or alternately cast the panels monolithically and use joint detail as shown in the Alternate Joint Detail "A". With either method of construction seal the joint(s) with an approved joint sealant.
2. All exposed surfaces of concrete headwalls to be permeable formwork liner finish.
3. All exposed edges of headwalls to be chamfered 25 mm except where noted otherwise.
4. 2 000 mm ø Corrugated Steel Pipe (CSP) end treatment assumed to have 2:1 beveled ends with 300 mm top and bottom steps. Also known as "standard slope" ends.
5. Assumed maximum 25 mm corrugation depth.
6. This standard is for culverts designed for a zero degree skew. A maximum of 15 degree skew is permissible provided that:
   - The headwall is constructed perpendicular to the axis of the culvert and
   - The roadway sideslope is modified (widening and flattening of the slope at the obtuse corners) to accomodate the headwall geometry.

REVISIONS

DATE	BY	DESCRIPTION
20/01/16	A.H.P.	Added washers & deleted damp proofing

DESIGN SEAL

PROVINCE OF MANITOBA — Original signed by A. H. PANKRATZ June 4, 2014 — REGISTERED PROFESSIONAL ENGINEER

RECORD SEAL

HEADWALL DETAILS (CONCRETE) FOR 4 - 2 000 ø C.S.P.'S

Manitoba Infrastructure
Water Management and Structures

APPROVED BY: Original signed by Ruth Eden
EXECUTIVE DIRECTOR OF STRUCTURES
DATE June 5, 2014

DESIGN	BY: A.H.P.	SCALE: 1:30 or as shown
	CHECKED: A.K.N.	SHEET No. 1 of 2
DETAILS	BY: K.P.	STD No. SC_ET_RCH_NS_4-2000
	CHECKED: A.H.P.	

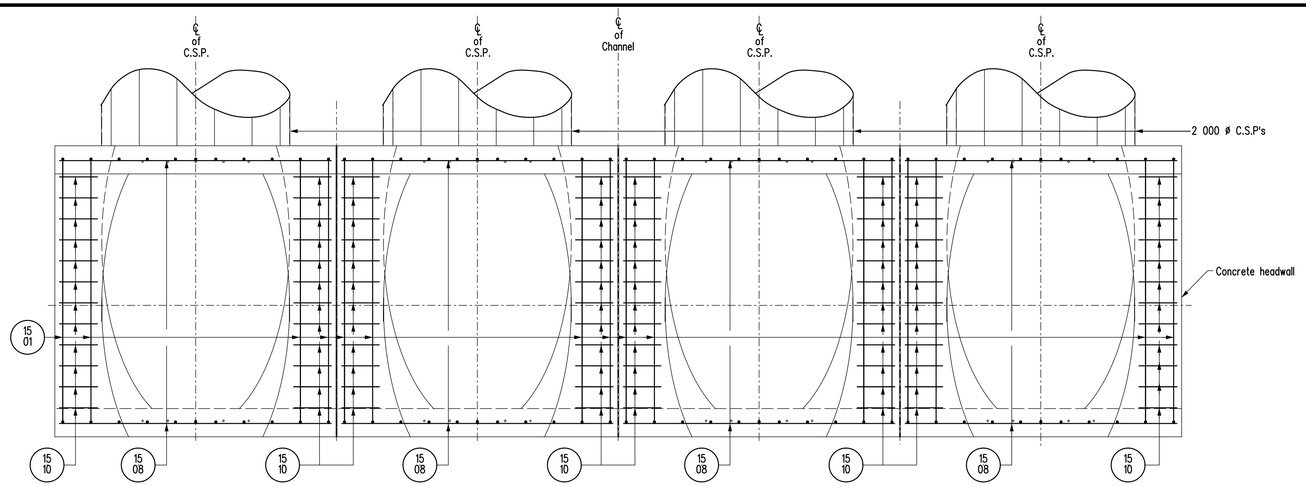

PART PLAN

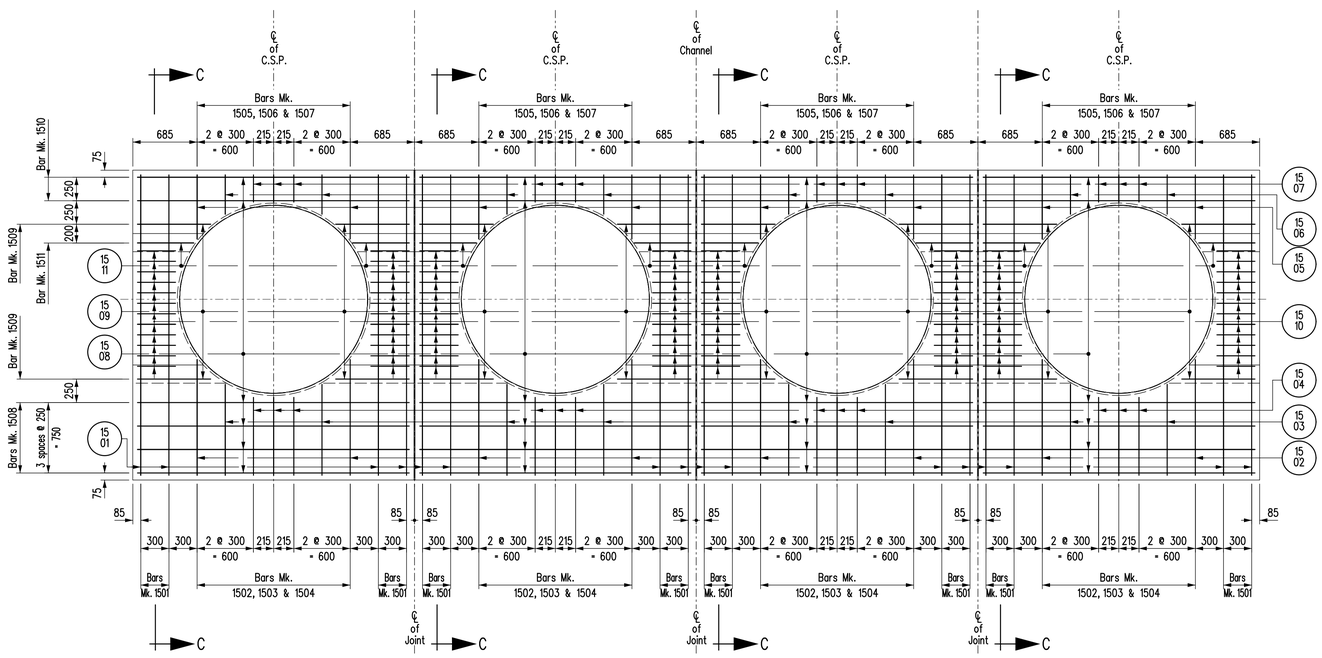

ELEVATION

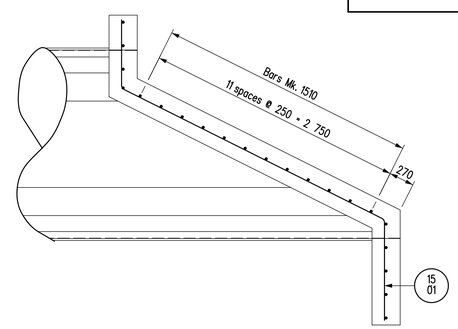

SECTION C-C

BILL OF REINFORCING STEEL

FOR 2 REINFORCED CONCRETE HEADWALLS

MARK	TYPE	PIN DIAMETER	LENGTH	No.	MASS	BENDING DIAGRAM
1501	BENT	90	4 950	32	248.69	1 080; 3 140; 2 820; 1 390; 730
1502	STR		1 230	16	30.90	
1503	STR		970	16	24.37	
1504	STR		830	24	31.27	
1505	STR		680	16	17.08	
1506	STR		420	16	10.55	
1507	STR		290	24	10.93	
1508	STR		2 890	48	217.79	
1509	STR		780	32	39.19	
1510	STR		410	192	123.59	
1511	STR		600	16	15.07	

Total mass of reinforcing steel	769.43 kg
Total volume of structural concrete	21.21 m³

NOTES:

1. All dimensions given in bending diagram are out to out, except radii and extensions on 90°, 135° & 180° hooks. Extensions on 90°, 135° & 180° hooks are the "A" or "G" dimensions for the standard 90°, 135° & 180° hooks referenced from the RSIC "Manual of Standard Practice". Radii are inside dimensions. All reinforcing steel bends and hooks shall conform to Clause 6.6.2 of C.S.A. A23.1-04, unless noted otherwise in the BILL OF REINFORCING STEEL.
2. All reinforcing steel shall be deformed steel, unless noted otherwise in the BILL OF REINFORCING STEEL.
3. All reinforcing steel shall conform to CSA G30.18-M92 "Billet Steel Bars for Concrete Reinforcement" Grade 400W, unless noted otherwise in the BILL OF REINFORCING STEEL.
4. Like bars shall be bundled, securely tied and identified as to Mark and Site No. by appropriate means. All other items to be identified in a similar fashion.
5. Bars marked with the suffix "P" shall be plain undeformed bars in accordance with CAN/CSA G40.21-M92 Grade 300W.
6. All bars shall be bent in accordance with the following detail:

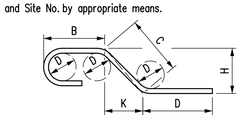

REVISIONS		
DATE	BY	DESCRIPTION

DESIGN SEAL

RECORD SEAL

Manitoba Infrastructure
Water Management and Structures

HEADWALL DETAILS (REINFORCING) FOR 4 - 2 000 ø C.S.P.'S

APPROVED BY: Original signed by Ruth Eden
EXECUTIVE DIRECTOR OF STRUCTURES
DATE June 5, 2014

DESIGN	BY: A.H.P.	SCALE: 1 : 30 or as shown
	CHECKED: A.K.N.	SHEET No. 2 of 2
DETAILS	BY: K.P.	
	CHECKED: A.H.P.	STD No. SC_ET_RCH_NS_4-2000