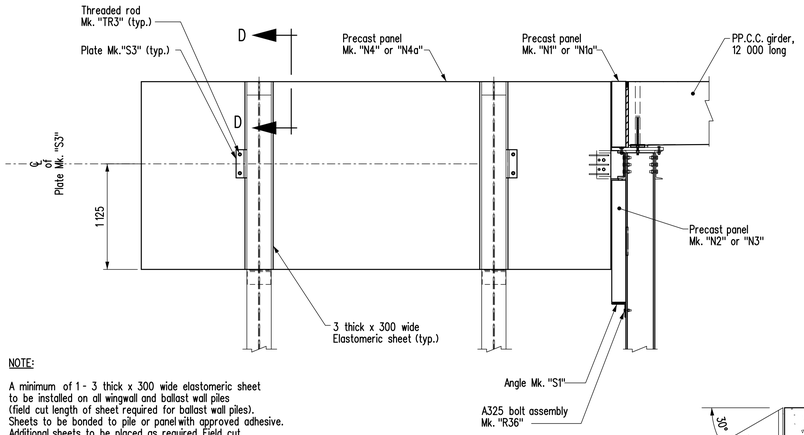

NOTE:

A minimum of 1 - 3 thick x 300 wide elastomeric sheet to be installed on all wingwall and ballast wall piles (field cut length of sheet required for ballast wall piles). Sheets to be bonded to pile or panel with approved adhesive. Additional sheets to be placed as required. Field cut additional sheets to fit if required.

PART SIDE ELEVATION

Bridge railing not shown for clarity

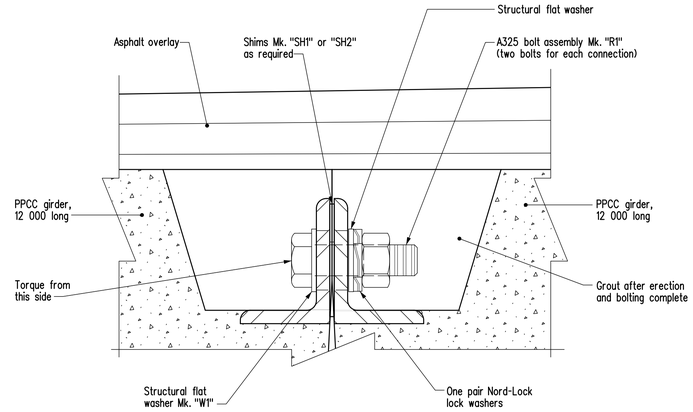

DETAIL OF LATERAL CONNECTION ANGLE

Scale 1:2

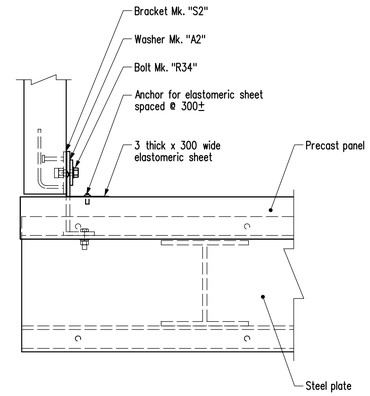

DETAIL "B"

Scale 1:10

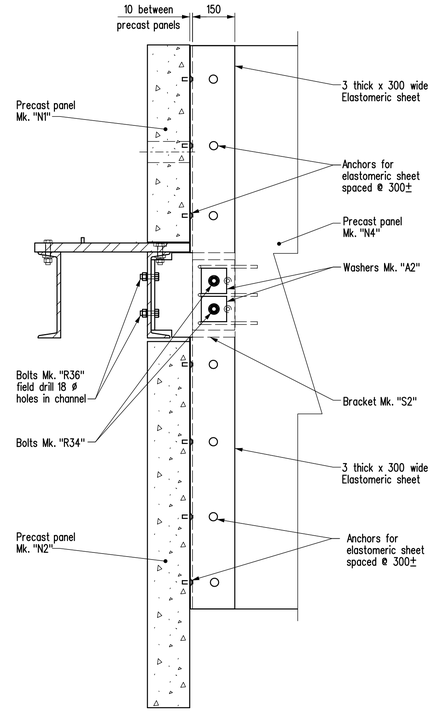

SECTION B-B

Scale 1:10

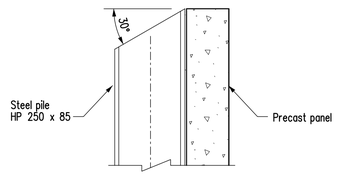

SECTION D-D

Typical for steel piles HP250 x 85 for wingwall precast panels
Scale 1:10

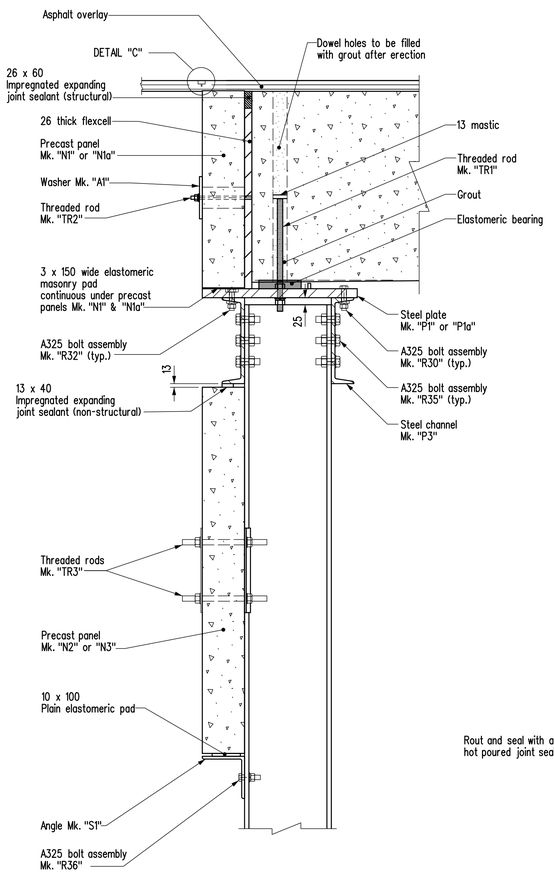

SECTION AT ABUTMENT

Scale 1:10

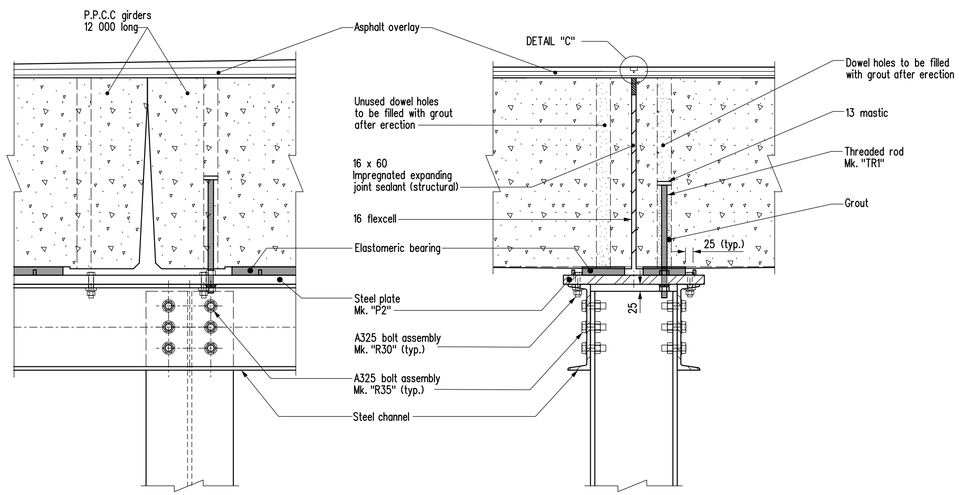

CROSS SECTION

ELEVATION

DETAILS AT INTERMEDIATE BENT

Scale 1:10

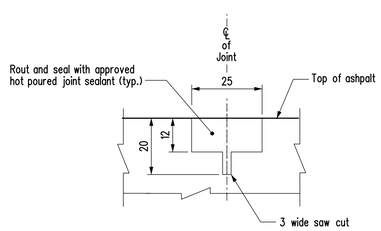

DETAIL "C"

Scale 1 : 1

NOTES:

1. RE: BOLTING

   a) GIRDER LATERAL CONNECTION
      - Bolts Mk. "R1" - c/w one F436 hardened washer, one structural flat washer Mk."W1", one pair Nord-Lock washers and one Grade DH heavy hex. nut.

   b) STEEL CAP
      - Bolts Mk. "R30" - One F436 hardened washer, one hardened bevel washer and one Grade DH heavy hex. nut.
      - Bolts Mk. "R32" - One hardened bevel washer and one Grade DH heavy
      - Bolts Mk. "R35" - Two F436 hardened washers and one Grade DH heavy hex. nut.

   c) PRECAST PANELS
      - Bolts Mk. "R36" - Two F436 hardened washers and one Grade DH heavy hex. nut.
      - Bolts Mk. "R34" - One F436 hardened washer and one structural plate washer Mk. "A2", no nuts.
      - Threaded rod Mk. "TR2" - One standard flat washer, one structural lock washer, structural plate washer Mk. "A1" and one stainless steel hex. nut.
      - Threaded rod Mk. "TR3" - two Filler plates Mk. "S4", one structural lock washer, two standard flat washers and two hex. nuts, Filler plate Mk. "S5" if required.

   d) GIRDER TO STEEL CAP
      - Threaded rod Mk. "TR1" - one standard flat washer and structural lock washer and two hex. nuts.

   e) High strength bolts shall be tightened by the turn-of-nut method as per Bridge Specifications. Ensure nuts are lubricated prior to bolting.

   f) Fill counter bored holes with mastic filler after tightening bolts.

2. When grouting dowel holes in girders, ensure that there is no grout between bottom of girder and bearing plate.
3. Apply galvalloy to all field welds & areas where galvanizing has been damaged.
4. Impregnated expanding joint sealant shall be installed as per manufacturer's recommendations.

REVISIONS		
DATE	BY	DESCRIPTION

DESIGN SEAL

Original signed and sealed by Andy Pankratz July 9, 2020

RECORD SEAL

ASSEMBLY DETAILS

Manitoba
Infrastructure
Bridges and Highway Structures

DESIGN	BY: A.H.P.	
	CHECKED: A.H.P.	
DETAILS	BY: K.P./N.J.	
	CHECKED: A.H.P.	

APPROVED BY:
Original signed by John Logan
November 8, 2020
DIRECTOR OF BRIDGES AND HIGHWAY STRUCTURES
DATE

SCALE: 1 : 30 or as shown

SHEET No.

STD No. PPCC_PR_10.8_12m_AD04