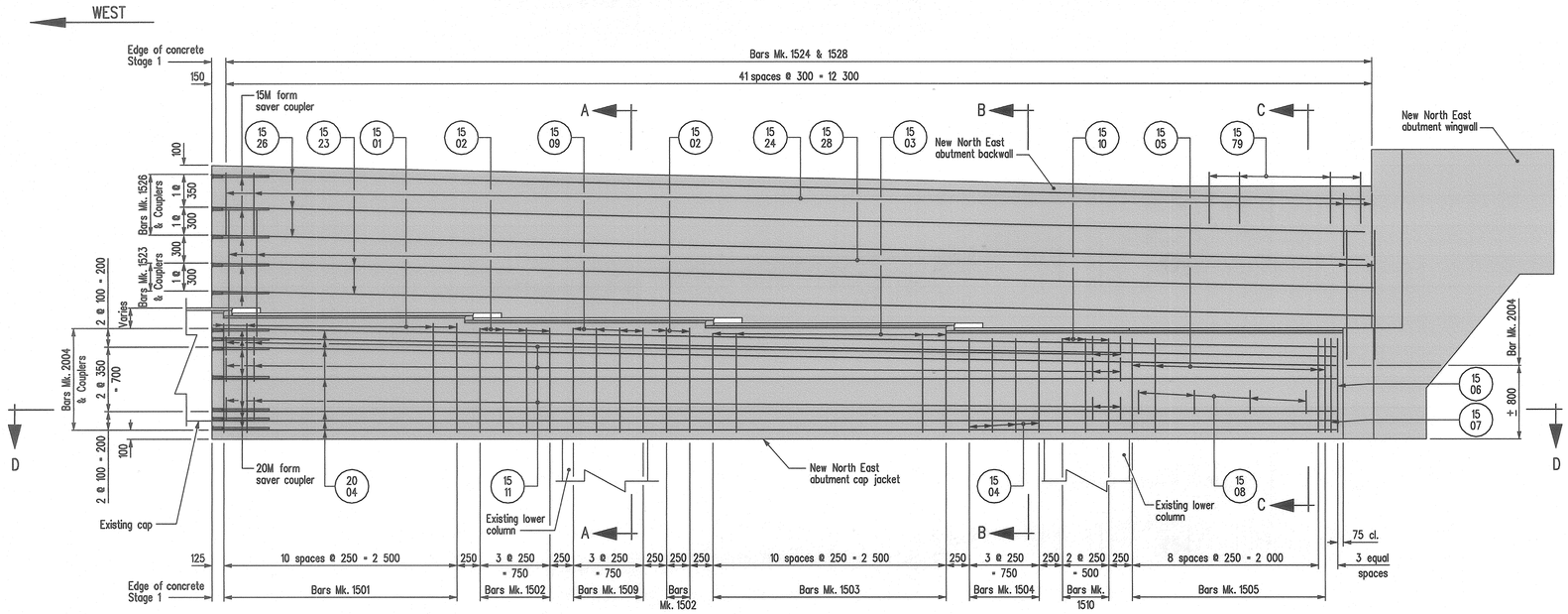

NORTH ABUTMENT PART FRONT ELEVATION

Showing only reinforcing steel in EAST side of NORTH cap and backwall.
Normal to face of abutment.

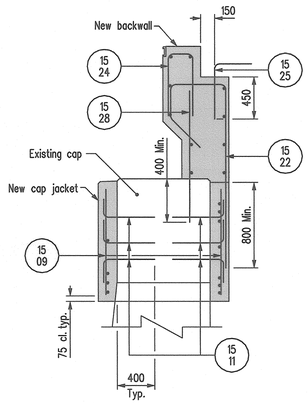

SECTION A-A

Backwall reinforcing typical.

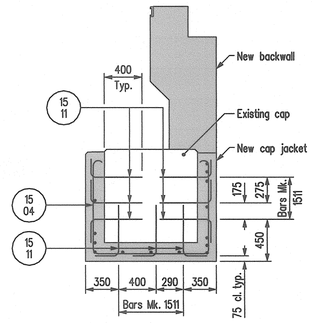

SECTION B-B

Not showing backwall reinforcing for clarity.

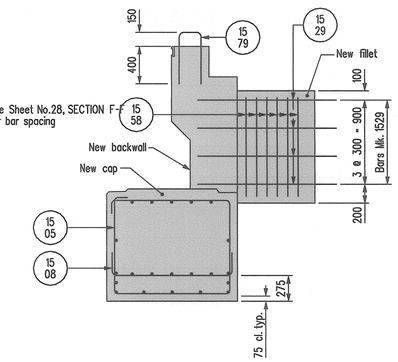

SECTION C-C

Not showing backwall reinforcing for clarity.

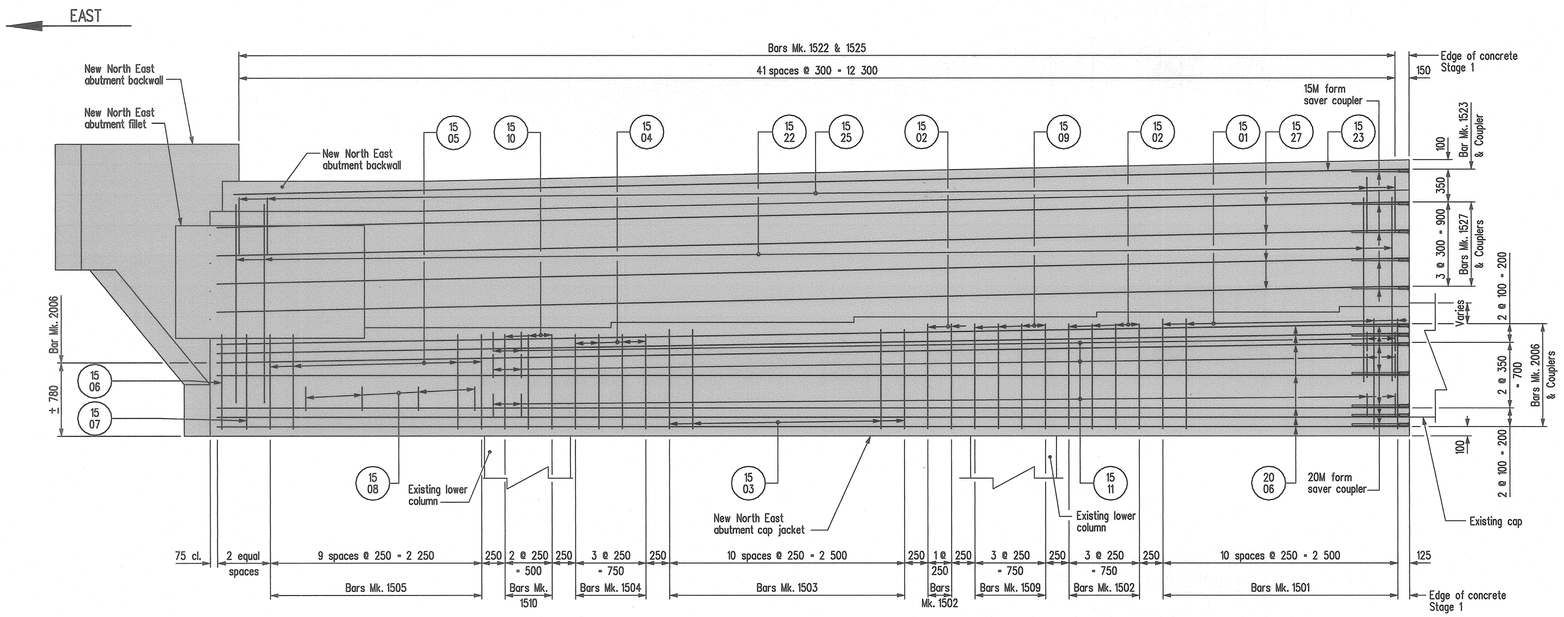

NORTH ABUTMENT PART REAR ELEVATION

Only showing reinforcing steel in EAST side of NORTH cap and backwall.
Normal to face of abutment.

NOTES :

1. Rebar Form Savers shall be Erico Lenton Form Saver splicing system or equivalent as approved by the Engineer.
2. Rebar Couplers shall be Erico Lenton Lock mechanical rebar splicing system or equivalent as approved by the engineer. The couplers shall develop the full yield strength in tension of the coupled bars.
3. Concrete cover shall be 75 mm unless noted otherwise.
4. Minimum lap lengths for bars 15M = 560 mm, for bars 20M = 680 mm, for bars 25M = 860 mm.
5. See Sheet No.28 for SECTION D-D.

REVISIONS		
DATE	BY	DESCRIPTION

PROVINCE OF MANITOBA — Mar. 15/10 — S.S RIHAL — REGISTERED PROFESSIONAL ENGINEER

NORTH ABUTMENT MODIFICATIONS STAGE 1 - REINFORCING DETAILS

RECONSTRUCTION AND STRENGTHENING OF EXISTING BRIDGE OVER ASSINIBOINE RIVER - CONTRACT THREE ON P.T.H. No. 100 IN R.L.'S 72, 73 & 94
PARISH OF ST. CHARLES

CITY OF WINNIPEG

Manitoba Infrastructure and Transportation
Water Control & Structures

DESIGN	BY: M.B.C.	
	CHECKED: S.S.R.	
DETAILS	BY: M.S.	
	CHECKED: S.S.R./J.J.	

RELEASED FOR CONSTRUCTION BY:
DIRECTOR — DATE
STRUCTURES, DESIGN AND CONSTRUCTION BRANCH

SCALE: 1:30 or As Shown
SHEET No. 27
SITE No. 2924-00

...\292400_Abut_Reinf_Contract3.dgn 2010-03-09 11:43:23 AM