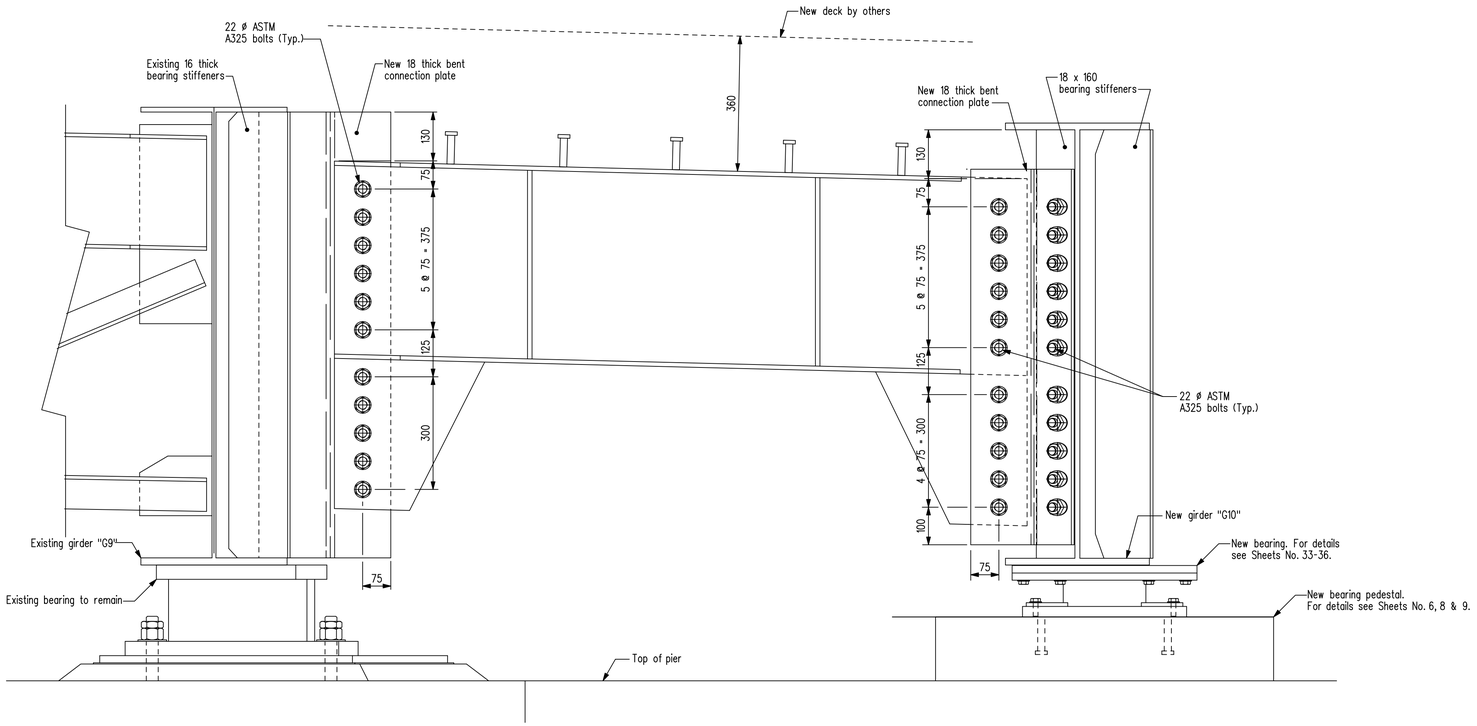

SECTION

Showing jacking frame connection details
at existing girder "G9" and new girder "G10".
Scale 1 : 7.5

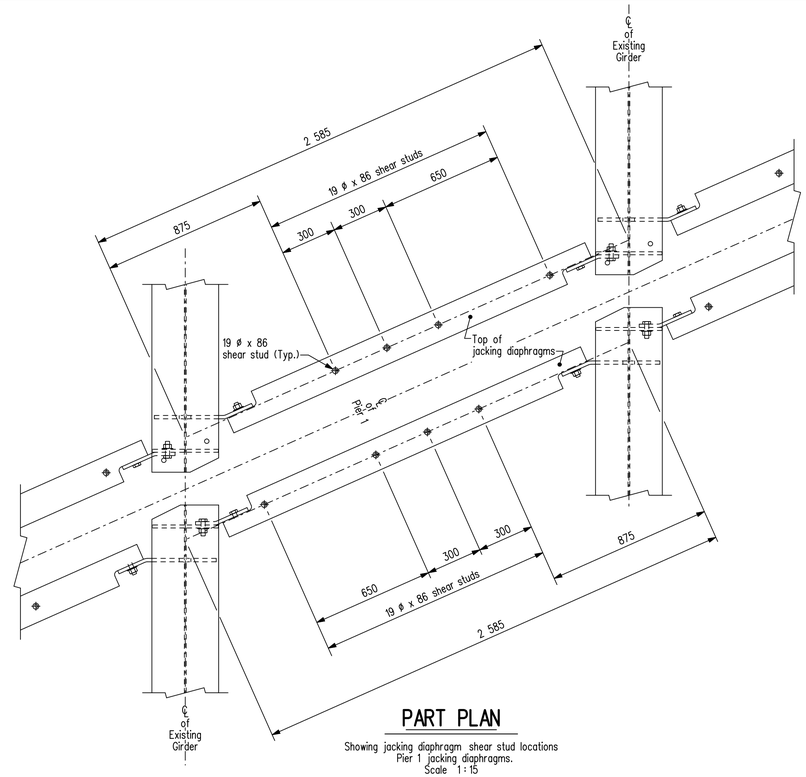

PART PLAN

Showing jacking diaphragm shear stud locations
Pier 1 jacking diaphragms.
Scale 1 : 15

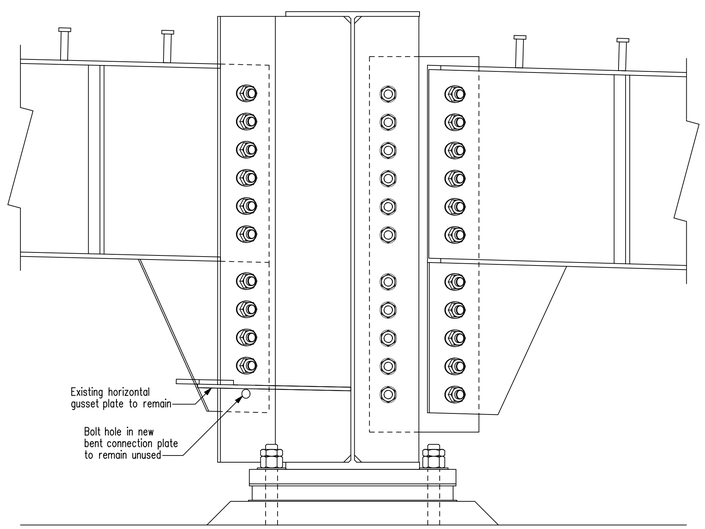

SECTION

Showing horizontal gusset plate for wind bracing
on existing girders.
Scale 1 : 7.5

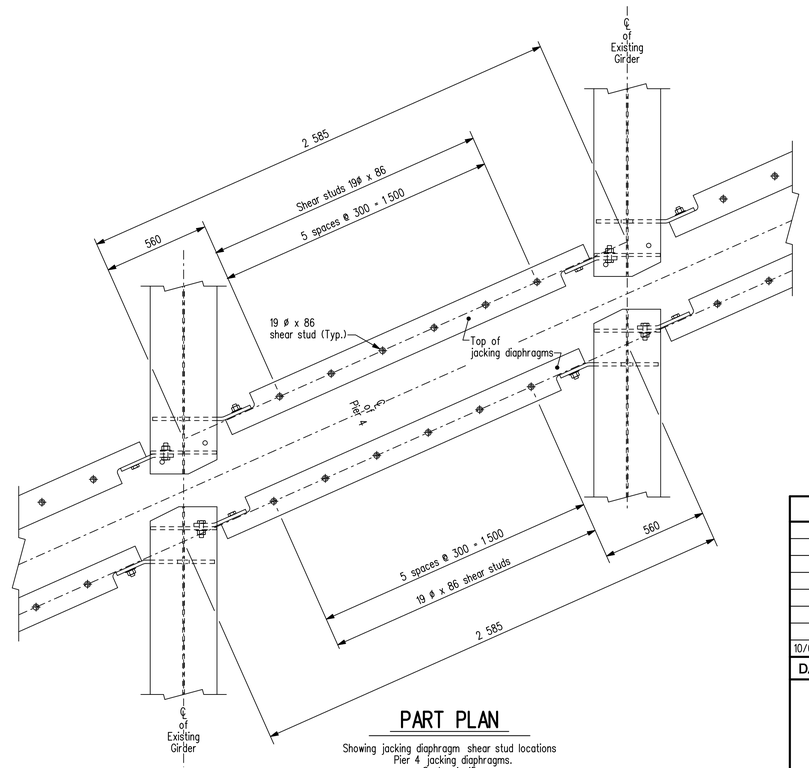

PART PLAN

Showing jacking diaphragm shear stud locations
Pier 4 jacking diaphragms.
Scale 1 : 15

NOTE:

The shear stud layout for the new diaphragms is preliminary. The Engineer will confirm the final shear stud layout once the deck joint details are confirmed.

REVISIONS		
10/03/04	J.J.	As built
DATE	BY	DESCRIPTION

PROVINCE OF MANITOBA
Original signed by
M. B.
CHISLETT
09/04/20
REGISTERED PROFESSIONAL ENGINEER

JACKING DIAPHRAGM DETAILS - PIERS 1 AND 4

RECONSTRUCTION AND STRENGTHENING OF EXISTING BRIDGE
OVER ASSINIBOINE RIVER - CONTRACT ONE
ON P.T.H. No. 100 IN R.L.'S 72, 73 & 94
PARISH OF ST. CHARLES

CITY OF WINNIPEG

Manitoba
Infrastructure and Transportation
Water Control & Structures

RELEASED FOR CONSTRUCTION
BY: Original signed by Ruth J. Eden 09/05/01
DIRECTOR DATE
STRUCTURES, DESIGN AND CONSTRUCTION BRANCH

DESIGN	BY: M.B.C.	
	CHECKED: M.W.H.	
DETAILS	BY: D.P.W.	
	CHECKED: M.B.C.	

SCALE: As Shown
SHEET No. 29
SITE No. 2924-00

...\Contract_1\292400rehab.dgn 2010-03-04 3:18:31 PM