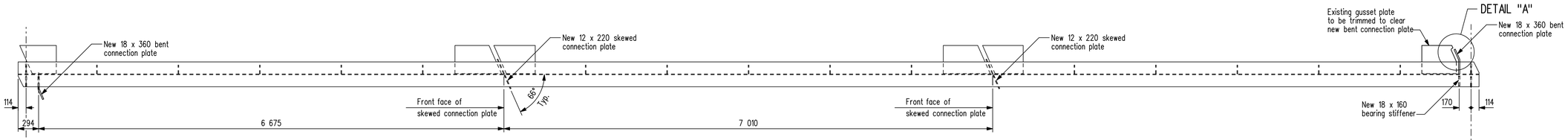

PLAN

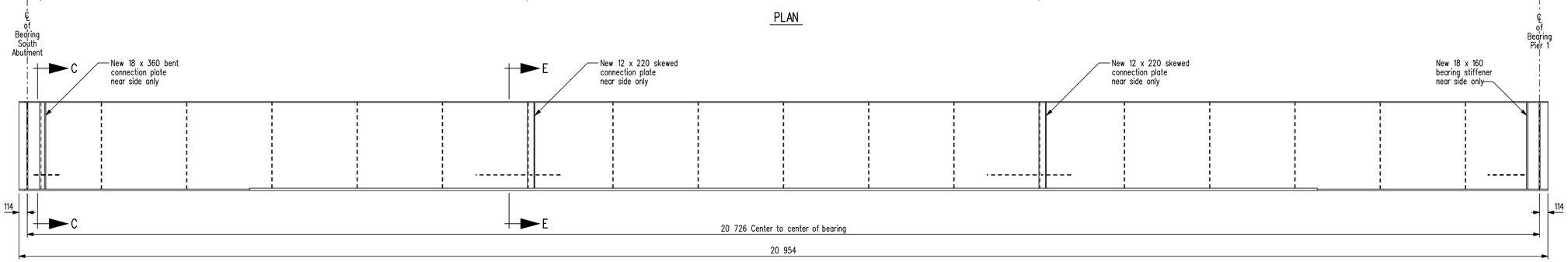

ELEVATION

SOUTH ABUTMENT TO PIER 1

Showing proposed modifications to existing girder Mk. "G9".

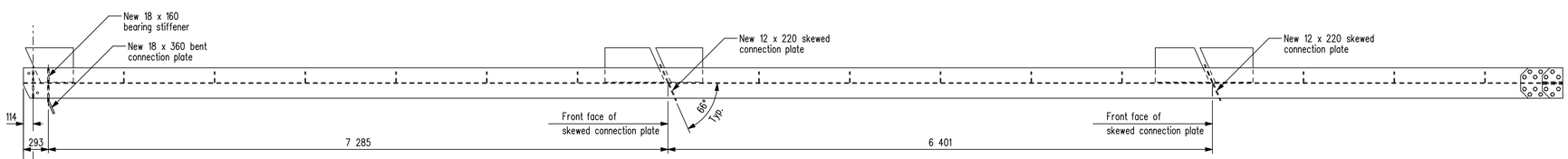

PLAN

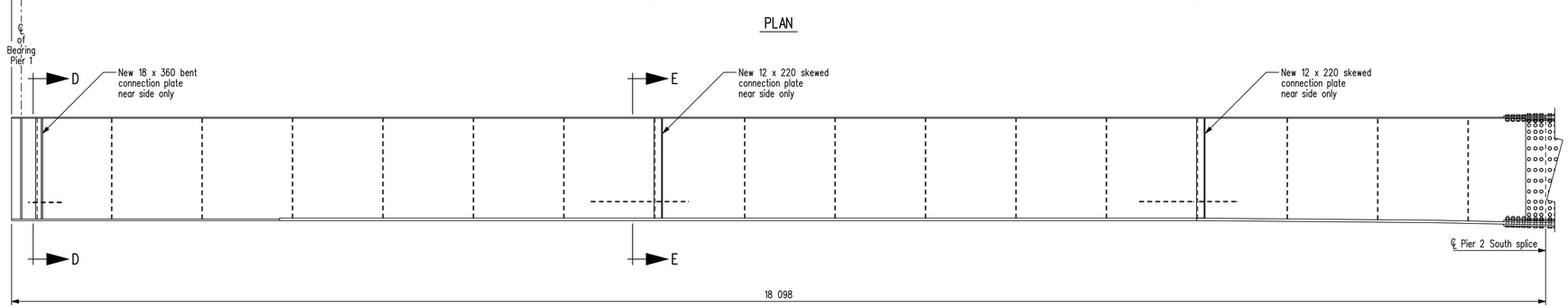

ELEVATION

PIER 1 TO PIER 2 SOUTH SPLICE

Showing proposed modifications to existing girder Mk. "G9".

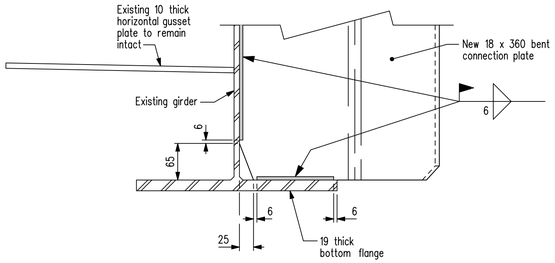

DETAIL "B"

Showing standard clip and weld terminations.
Scale 1 : 5

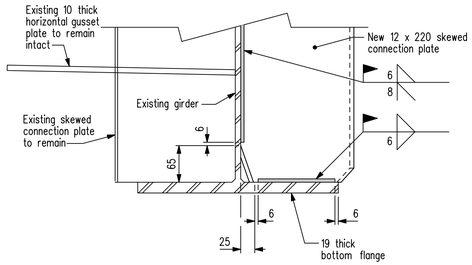

DETAIL "C"

Showing standard clip and weld terminations.
Scale 1 : 5

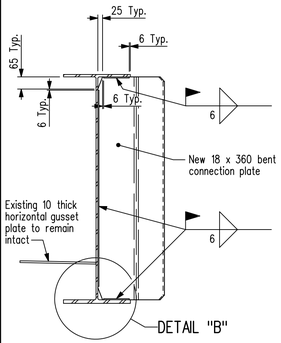

SECTION C-C

Showing new bent connection plate added to existing girders at North and South abutments.
Scale 1 : 15

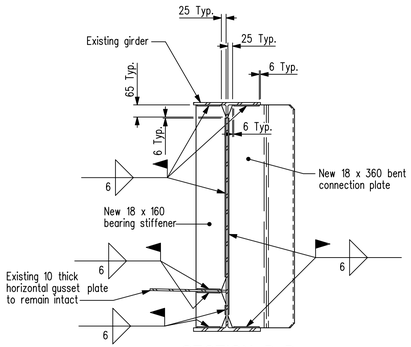

SECTION D-D

Showing new bent connection plate and stiffeners added to existing girders at piers 1 & 4.
Scale 1 : 15

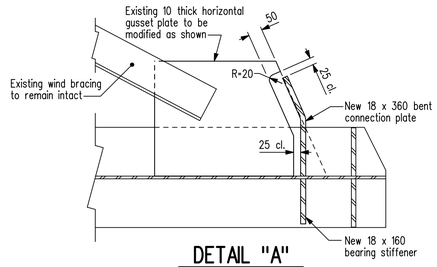

DETAIL "A"

Showing modifications to existing horizontal gusset plate at jacking diaphragms.
Scale 1 : 10

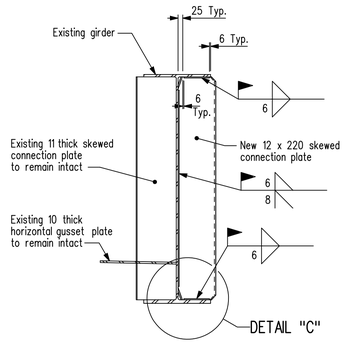

SECTION E-E

Showing new skewed connection plate.
Scale 1 : 15

REVISIONS		
10/03/04	J.J.	As built
DATE	BY	DESCRIPTION

PROVINCE OF MANITOBA
Original signed by
M. B. CHISLETT
09/04/20
REGISTERED PROFESSIONAL ENGINEER

MODIFICATIONS TO EXISTING GIRDER Mk. "G9"

RECONSTRUCTION AND STRENGTHENING OF EXISTING BRIDGE
OVER ASSINIBOINE RIVER - CONTRACT ONE
ON P.T.H. No. 100 IN R.L.'S 72, 73 & 94
PARISH OF ST. CHARLES

CITY OF WINNIPEG

Manitoba
Infrastructure and Transportation
Water Control & Structures

RELEASED FOR CONSTRUCTION BY:
Original signed by
Ruth J. Eden
09/05/01
DIRECTOR — DATE
STRUCTURES, DESIGN AND CONSTRUCTION BRANCH

DESIGN	BY: M.B.C.	
	CHECKED: M.W.H.	
DETAILS	BY: D.P.W.	
	CHECKED: M.B.C.	

SCALE: 1 : 30 or As Shown
SHEET No. 21
SITE No. 2924-00

...\Contract_1\292400rehab.dgn 2010-03-04 3:03:56 PM