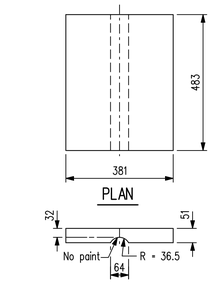

SOLE PLATE Mk. "P7"

Scale 1 : 10

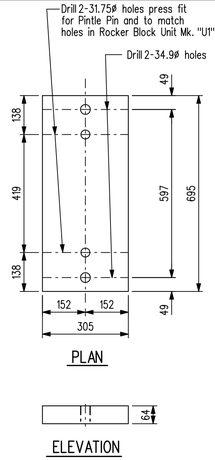

BEARING PLATE Mk. "P9"

Scale 1 : 10

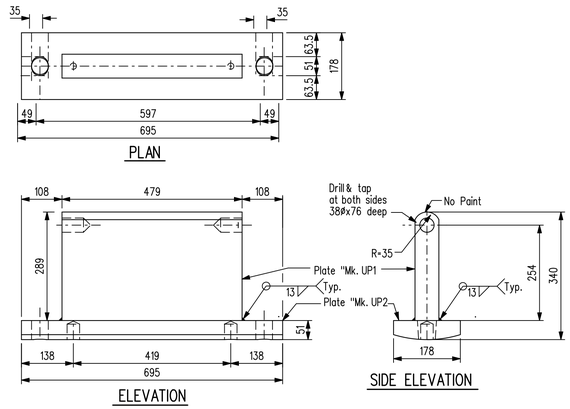

ROCKER BLOCK UNIT Mk. "U1"

Scale 1 : 7.5

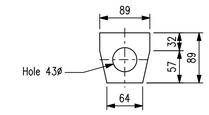

RETAINER PLATE Mk. "P8"

Scale 1 : 5

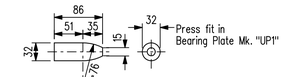

PINTLE PIN Mk. "X1"

Scale 1 : 5

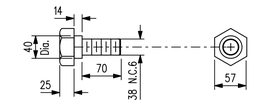

RETAINER SCREW Mk. "R3"

Scale 1 : 5

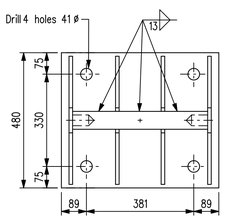

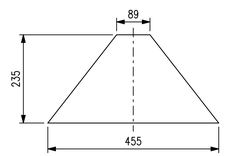

PLATE Mk. "UP3"

Scale 1 : 7.5

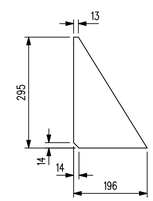

PLATE Mk. "UP4"

Scale 1 : 7.5

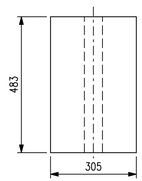

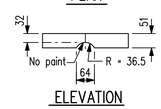

SOLE PLATE Mk. "P9"

Scale 1 : 10

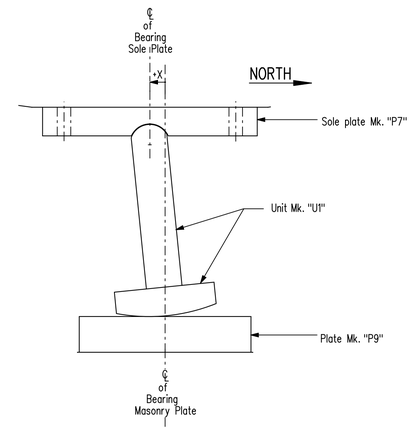

TYPICAL DETAIL

Showing Expansion bearing Temperature Offset on Pier 2
X = Bearing temperature offset
N.T.S.

EXPANSION BEARINGS TEMPERATURE OFFSET SETTING TABLE	
PIER 2	
°C	X mm
-40	-19
-30	-15
-20	-11
-10	-6
0	-2
5	0
10	2
20	6
30	11
40	15

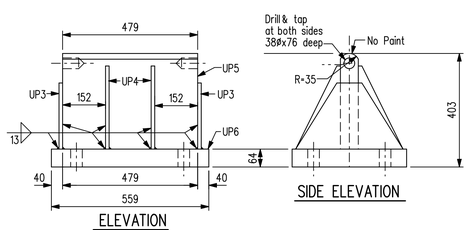

ROCKER BLOCK UNIT Mk. "U2"

Scale 1 : 10

REVISIONS		
10/03/04	J.J.	As built
DATE	BY	DESCRIPTION

PROVINCE OF MANITOBA
Original signed by
M. B. CHISLETT
09/04/20
REGISTERED PROFESSIONAL ENGINEER

BEARING DETAILS

RECONSTRUCTION AND STRENGTHENING OF EXISTING BRIDGE
OVER ASSINIBOINE RIVER - CONTRACT ONE
ON P.T.H. No. 100 IN R.L.'S 72, 73 & 94
PARISH OF ST. CHARLES

CITY OF WINNIPEG

Manitoba
Infrastructure and Transportation
Water Control & Structures

RELEASED FOR CONSTRUCTION BY:
Original signed by
Ruth J. Eden
09/0501
DIRECTOR — DATE
STRUCTURES, DESIGN AND CONSTRUCTION BRANCH

DESIGN	BY: M.B.C.	SCALE: As shown
	CHECKED: M.B.C.	SHEET No. 36
DETAILS	BY: G.S.	
	CHECKED: M.B.C.	SITE No. 2924-00

...\Contract_1\292400_Bearings.dgn 2010-03-04 3:45:51 PM