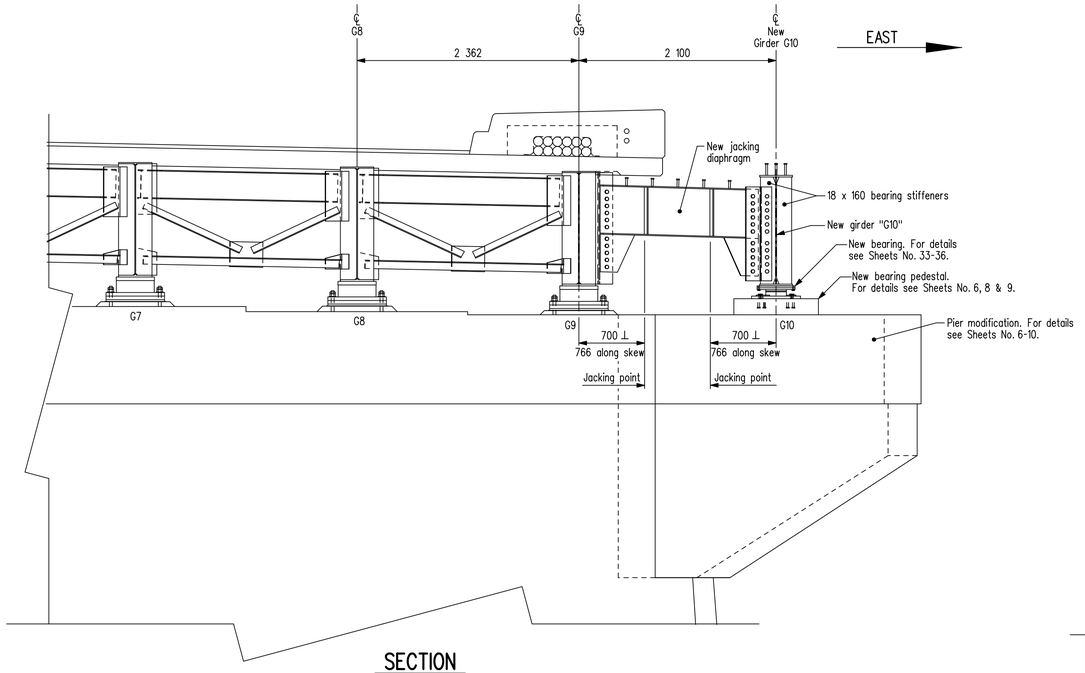

SECTION

Showing proposed jacking diaphragm between girders G9 and G10 at Piers 1 & 4. Shown normal to ℄ of roadway.

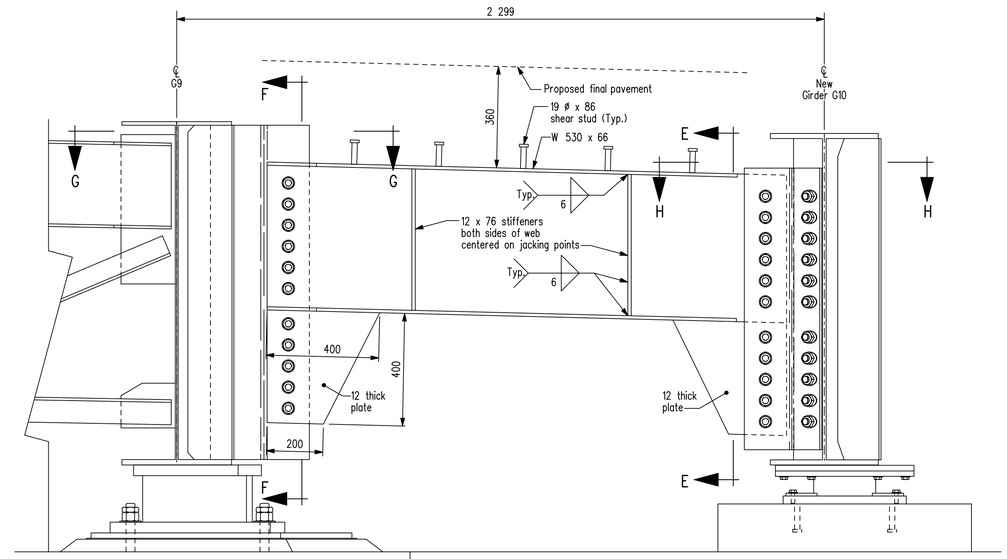

SECTION

Showing proposed jacking diaphragm between girders G9 and G10 at Piers 1 & 4. Shown normal to ℄ of jacking diaphragm. Scale 1 : 10

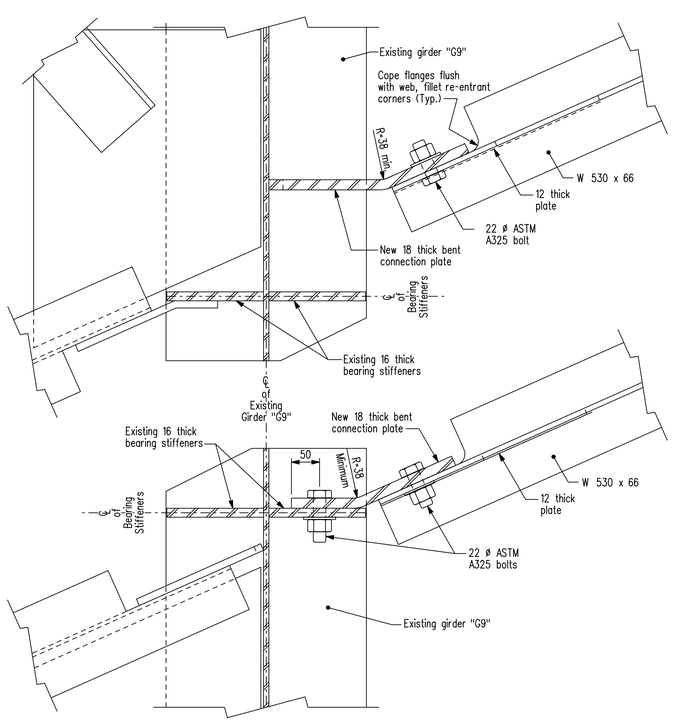

SECTION G-G

Showing jacking frame connection details at existing girder "G9". Scale 1 : 5

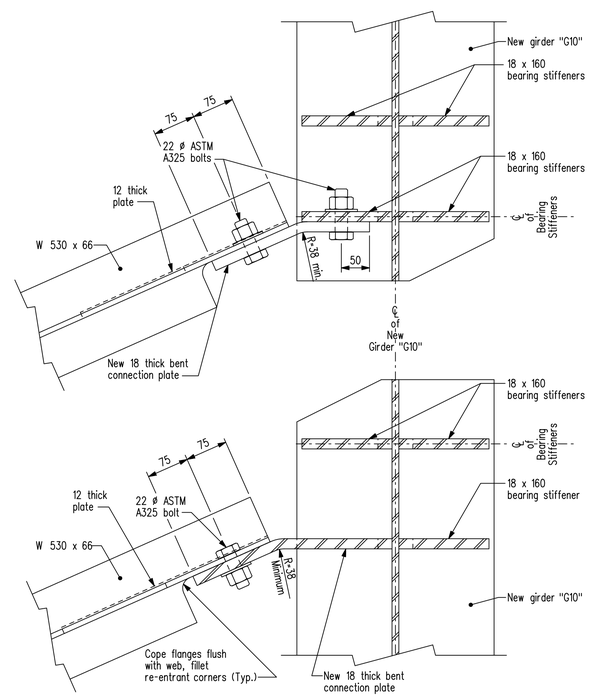

SECTION H-H

Showing jacking frame connection details at new girder "G10". Scale 1 : 5

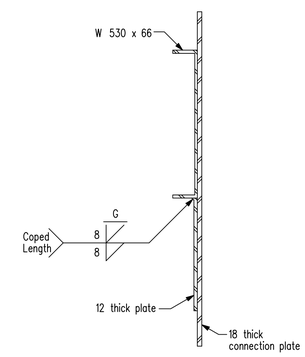

SECTION F-F

Showing weld detail between W-beam and bottom plate at connection plate or bearing stiffener. Scale 1 : 10

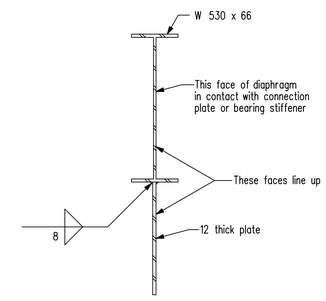

SECTION E-E

Showing weld detail between W-beam and bottom plate and plate alignment. Scale 1 : 10

REVISIONS		
10/03/04	J.J.	As built
DATE	BY	DESCRIPTION

PROVINCE OF MANITOBA
Original signed by
M. B. CHISLETT
09/04/20
REGISTERED PROFESSIONAL ENGINEER

JACKING DIAPHRAGM DETAILS - PIERS 1 AND 4

RECONSTRUCTION AND STRENGTHENING OF EXISTING BRIDGE
OVER ASSINIBOINE RIVER - CONTRACT ONE
ON P.T.H. No. 100 IN R.L.'S 72, 73 & 94
PARISH OF ST. CHARLES

CITY OF WINNIPEG

Manitoba
Infrastructure and Transportation
Water Control & Structures

RELEASED FOR CONSTRUCTION BY:
Original signed by
Ruth J. Eden
09/05/01
DIRECTOR — DATE
STRUCTURES, DESIGN AND CONSTRUCTION BRANCH

DESIGN	BY: M.B.C.	SCALE: 1 : 30 or	SHEET No. 28
	CHECKED: M.W.H.		
DETAILS	BY: D.P.W.	As Shown	SITE No. 2924-00
	CHECKED: M.B.C.		