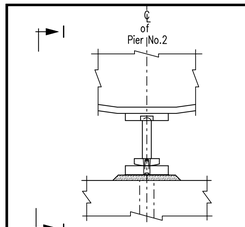

SECTION G - G

Scale 1 : 20

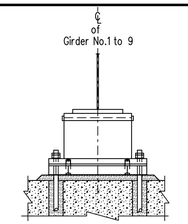

SECTION I - I

Scale 1 : 20

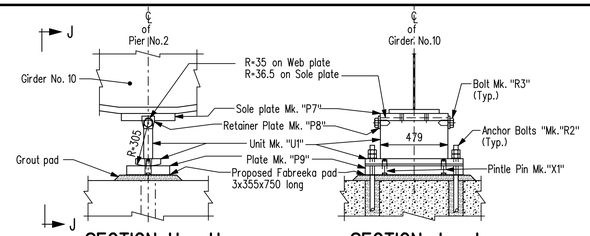

SECTION H - H

Showing new rocker steelbearing for girder G10 at pier 2

Scale 1 : 20

SECTION J - J

Scale 1 : 20

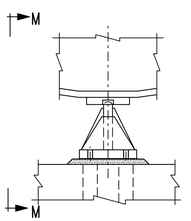

SECTION K - K

Scale 1 : 20

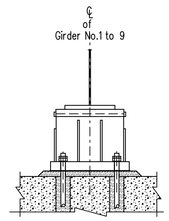

SECTION M - M

Scale 1 : 20

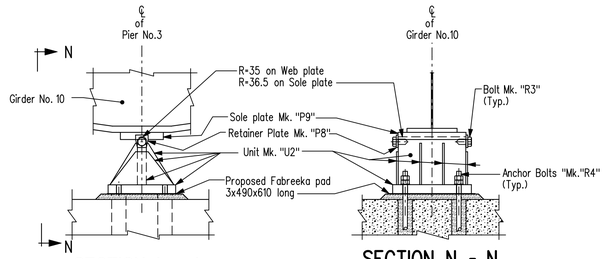

SECTION L - L

Showing new fixed steelbearing for girder G10 at pier 3

Scale 1 : 20

SECTION N - N

Scale 1 : 20

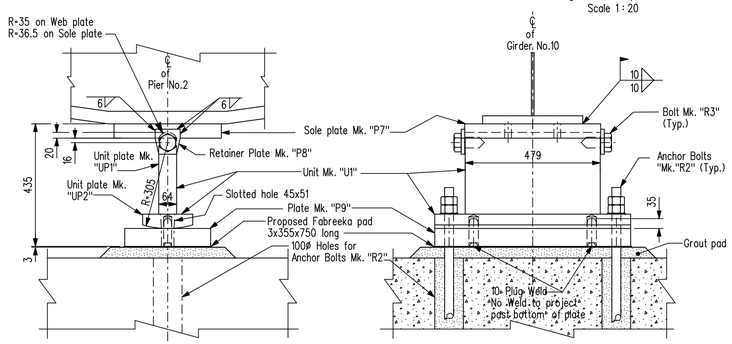

SIDE ELEVATION

END ELEVATION

BEARING DETAILS PIER 2

Showing R.S. Bearing for Girder 10

Scale 1 : 10

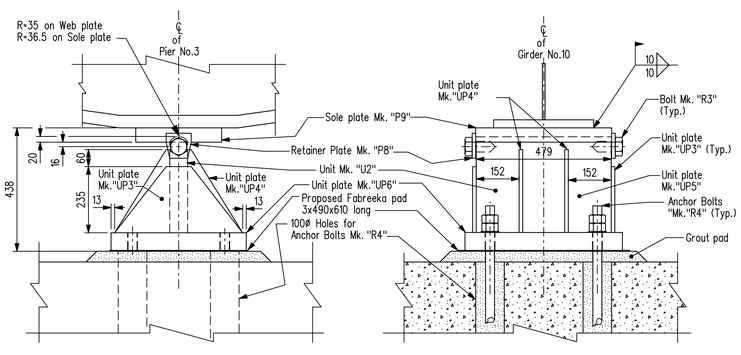

SIDE ELEVATION

END ELEVATION

BEARING DETAILS PIER 3

Showing F.S. Bearing for Girders 10

Scale 1 : 10

BILL OF STRUCTURAL STEEL

POT BEARINGS

SITE No. 2924-00

Mk.	No.	DESCRIPTION	SIZE
M.P.B.	12	Pier No. 1 South Bearings & Pier No. 4	For Girders No. 1, 2, 9 & 10
		Each Bearing to be fabricated from (Galv.)	
		1 - Steelplate Mk."P3"	20 x 300 x 405 long
		1 - Steelplate Mk."P4"	20 x 300 x 405 long
		1 - Steelplate Mk."P5"	28 x 300 x 437 long c/w 4-19ø Studs 100 long
M.P.B.	4	Pier No. 1 North Bearings	For Girders No. 1, 2, 9 & 10
		Each Bearing to be fabricated from (Galv.)	
		1 - Steelplate Mk."P13"	20 x 325 x 405 long
		1 - Steelplate Mk."P10"	20 x 325 x 405 long
		1 - Steelplate Mk."P5"	28 x 300 x 437 long c/w 4-19ø Studs 100 long
U.P.B.	18	Pier No. 1 South Bearings & Pier No. 4	For Girders No. 3 to 8
		Each Bearing to be fabricated from (Galv.)	
		1 - Steelplate Mk."P3"	20 x 300 x 405 long
		1 - Steelplate Mk."P6"	38 x 300 x 405 long
		1 - Steelplate Mk."P5"	28 x 300 x 437 long c/w 4-19ø Studs 100 long
U.P.B.	6	Pier No. 1 North Bearings	For Girders No. 3 to 8
		Each Bearing to be fabricated from (Galv.)	
		1 - Steelplate Mk."P13"	20 x 325 x 405 long
		1 - Steelplate Mk."P11"	38 x 325 x 405 long
		1 - Steelplate Mk."P5"	28 x 300 x 437 long c/w 4-19ø Studs 100 long

BILL OF STRUCTURAL STEEL

STEEL BEARINGS

SITE No. 2924-00

Mk.	No.	DESCRIPTION	SIZE
F.S.B.	18	Abutment Bearings (Painted)	For Girders No. 1 to 9
		Each Bearing to be fabricated from	
		1 - Steelplate Mk."P1"	38 x 200 x 550 long
		1 - Steelplate Mk."P2"	44 x 200 x 550 long
		2 - Threaded steelrods Mk. "R1" (Galv.)	32ø x 300 long c/w 2 hex nuts 1 plate washer (Galv.)
F.S.B.	2	Abutment Bearings (Painted)	For Girder No. 10
		Each Bearing to be fabricated from	
		1 - Steelplate Mk."P1"	38 x 200 x 550 long
		1 - Steelplate Mk."P2"	44 x 200 x 550 long
		2 - Anchor Bolts Mk."R2" (Galvanized)	32ø x 610 long c/w 2 hex nuts 1 plate washer (Galv.)
R.S.B.	1	Pier No. 2	For Girder No. 10
		Bearing to be fabricated from (Painted)	
		1 - Steelplate Mk."P7"	51 x 381 x 483 long
		1 - Unit Mk. "U1"	
		1-UP1 Steel Plate	64 x 295 x 479 long
		1-UP2 Steel Plate	51 x 178 x 695 long
		2 - Retainer plate Mk."P8"	13 x 89 x 89 long
		1 - Steelplate Mk."P9"	64 x 305 x 695 long
		2 - Anchor Bolts Mk."R2"	32ø x 610 long c/w 2 hex nuts 1 plate washer (Galv.)
		2 - Pintle Pins Mk."X1"	32ø x 86 long as detailed
		2 - Retainer Screws Mk."R3"	As detailed
F.S.B.2	1	Pier No. 3	For Girder No. 10
		Bearing to be fabricated from (Painted)	
		1 - Sole plate Mk."P9"	51 x 305 x 483 long
		1 - Unit Mk. "U2"	
		2-UP3 Steel Plate	13 x 235 x 455 long
		4-UP4 Steel Plate	13 x 196 x 295 long
		1-UP5 Steel Plate	64 x 340 x 479 long
		1-UP6 Steel Plate	64 x 480 x 559 long
		2 - Retainer plate Mk."P8"	13 x 89 x 89 long
		4 - Anchor Bolts Mk."R4"	38ø x 610 long c/w 2 hex nuts 1 plate washer (Galv.)
		2 - Retainer Screws Mk."R3"	As detailed

NOTES :

1 . Steel for the pier 2 and pier 3 bearings for girder G10 shall be CSA G40.21 Grade 300W or Grade 350W or ASTM A709M Grade 250 or Grade 345.

2 . The bearings for girder G10 at pier 2 and pier 3 are detailed using imperial plate thicknesses. The contractor will be permitted to substitute standard metric plate thickness of equal or greater thicknesses provide that the overall bearing geometry is retained.

3 . Anchor bolts shall be ASTM F1554 Grade 36 galvanized.

4 . Hex nuts for anchor bolts shall be ASTM A194 Grade 2H galvanized or ASTM A563 Grade A galvanized.

REVISIONS

DATE	BY	DESCRIPTION
10/03/04	J.J.	As built

PROVINCE OF MANITOBA
Original signed by
M. B. CHISLETT
09/04/20
REGISTERED PROFESSIONAL ENGINEER

BEARING DETAILS

RECONSTRUCTION AND STRENGTHENING OF EXISTING BRIDGE
OVER ASSINIBOINE RIVER - CONTRACT ONE
ON P.T.H. No. 100 IN R.L.'S 72, 73 & 94
PARISH OF ST. CHARLES

CITY OF WINNIPEG

Manitoba
Infrastructure and Transportation
Water Control & Structures

RELEASED FOR CONSTRUCTION
BY:
Original signed by
Ruth J. Eden
09/05/01
DIRECTOR — DATE
STRUCTURES, DESIGN AND CONSTRUCTION BRANCH

DESIGN	BY: M.B.C.	
	CHECKED: M.B.C.	
DETAILS	BY: G.S.	
	CHECKED: M.B.C.	

SCALE: As shown

SHEET No. 35

SITE No. 2924-00

...\Contract_1\292400_Bearings.dgn 2010-03-04 3:42:48 PM