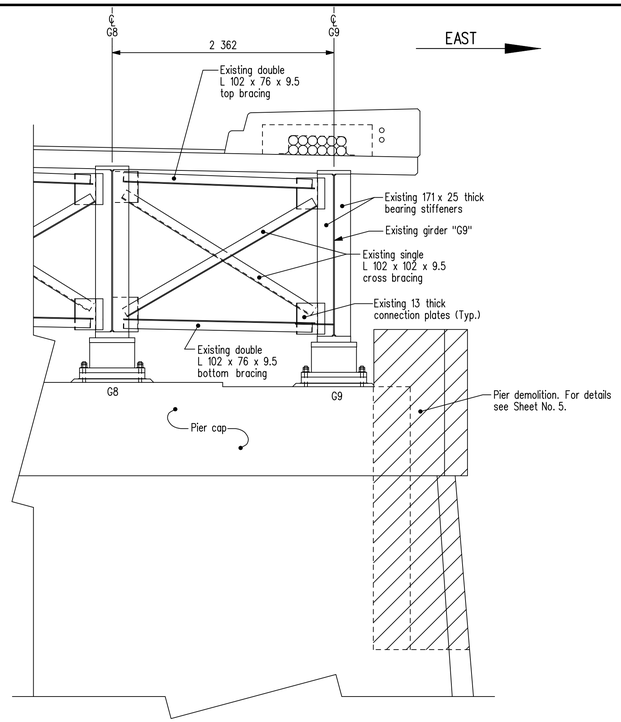

SECTION

Showing existing X-frame bracing at Piers 2 & 3.
Shown normal to ℄ of roadway.

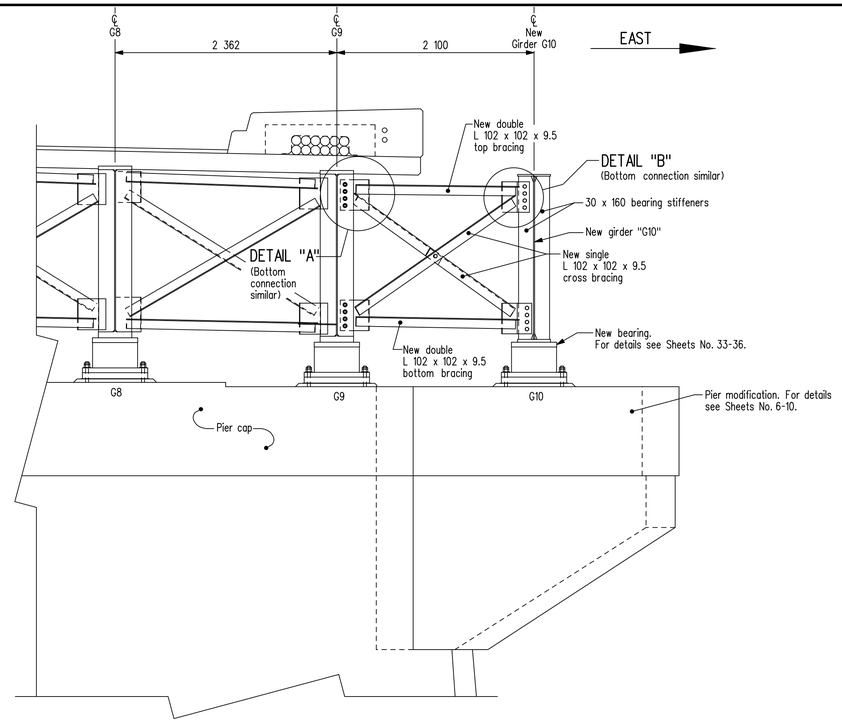

SECTION

Showing proposed X-frame bracing between girders G9 and G10 at Piers 2 & 3.
Shown normal to ℄ of roadway.

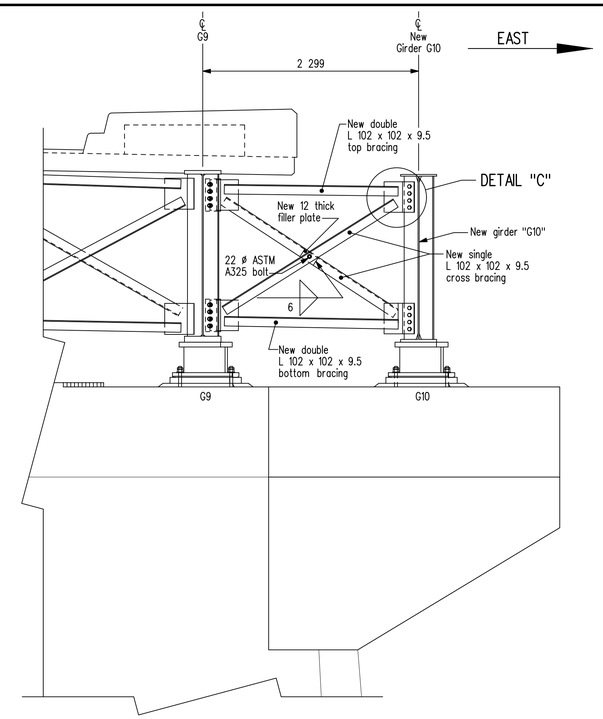

SECTION

Showing proposed X-frame bracing between girders G9 and G10 at Piers 2 & 3.
Shown along skew angle.

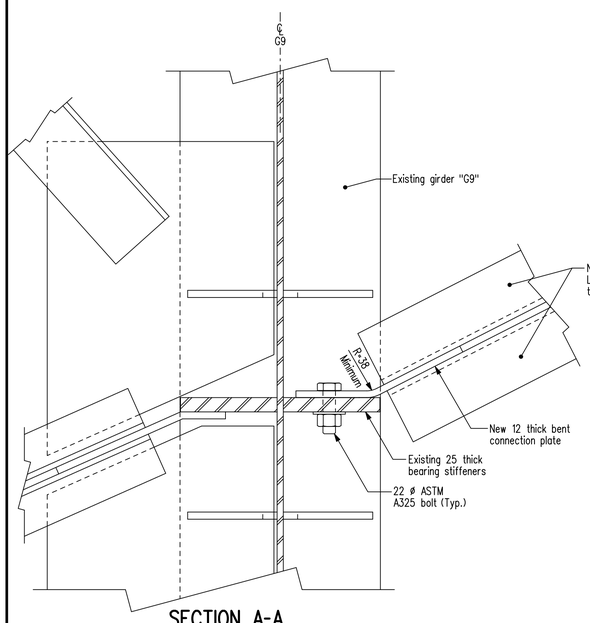

SECTION A-A

Showing connection details for proposed top X-frame bracing at existing girder G9.
Scale 1 : 5

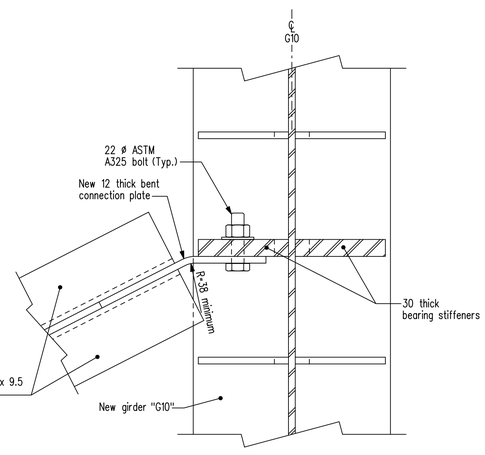

SECTION B-B

Showing connection details for proposed top X-frame bracing at new girder G10.
Scale 1 : 5

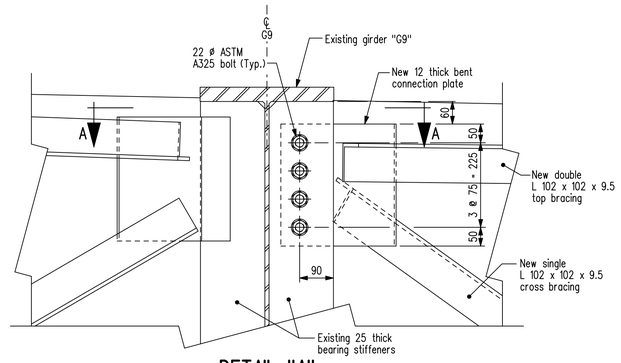

DETAIL "A"

Showing proposed bolted connection for new bent connection plate to existing bearing stiffener.
Shown normal to ℄ of girder.
Scale 1 : 7.5

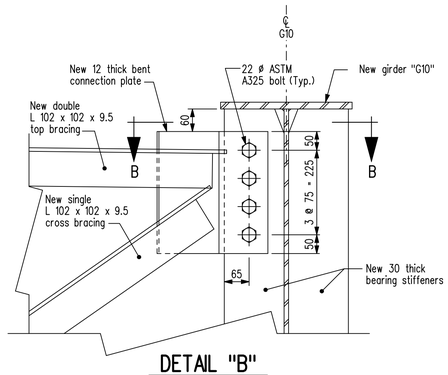

DETAIL "B"

Showing proposed bolted connection for new bent connection plate to new bearing stiffener.
Shown normal to ℄ of girder.
Scale 1 : 7.5

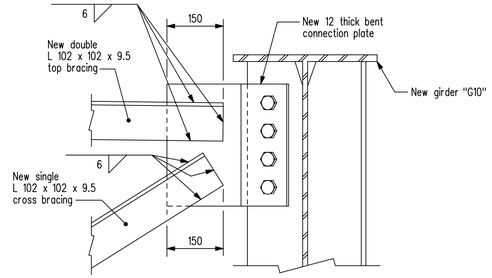

DETAIL "C"

Showing typical bracing weld details.
Scale 1 : 7.5

REVISIONS		
10/03/04	J.J.	As built
DATE	BY	DESCRIPTION

PROVINCE OF MANITOBA
Original signed by
M. B. CHISLETT
09/04/20
REGISTERED PROFESSIONAL ENGINEER

PIERS 2 AND 3 X-FRAME BRACING DETAILS

RECONSTRUCTION AND STRENGTHENING OF EXISTING BRIDGE
OVER ASSINIBOINE RIVER - CONTRACT ONE
ON P.T.H. No. 100 IN R.L.'S 72, 73 & 94
PARISH OF ST. CHARLES

CITY OF WINNIPEG

Manitoba
Infrastructure and Transportation
Water Control & Structures

RELEASED FOR CONSTRUCTION BY:
Original signed by
Ruth J. Eden
09/05/01
DIRECTOR — DATE
STRUCTURES, DESIGN AND CONSTRUCTION BRANCH

DESIGN	BY: M.B.C.	SCALE: 1 : 30 or	SHEET No. 26
	CHECKED: A.H.P.		
DETAILS	BY: D.P.W.	As Shown	SITE No. 2924-00
	CHECKED: M.B.C.		

...\Contract_1\292400rehab.dgn 2010-03-04 3:15:20 PM