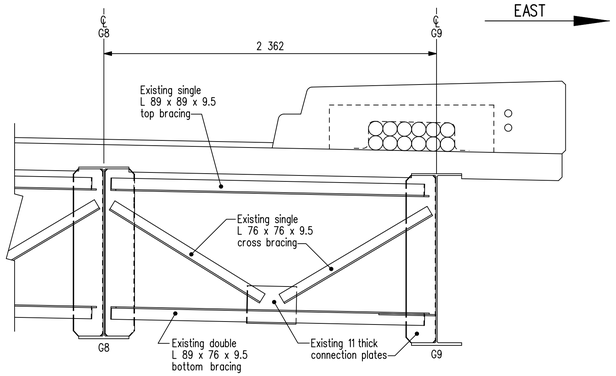

SECTION

Showing existing K-frame bracing located between girders G8 and G9 between piers and abutments. Shown normal to ℄ of roadway.

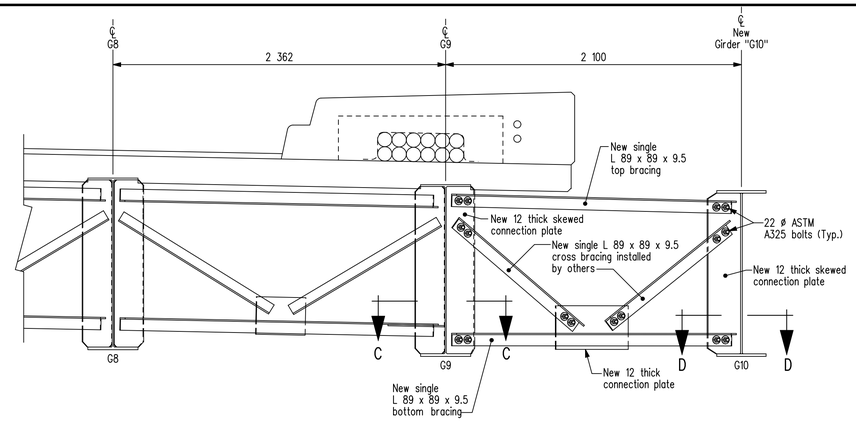

SECTION

Showing proposed K-frame bracing located between existing girder G9 and new girder G10 between piers and abutments. Shown normal to ℄ of roadway.

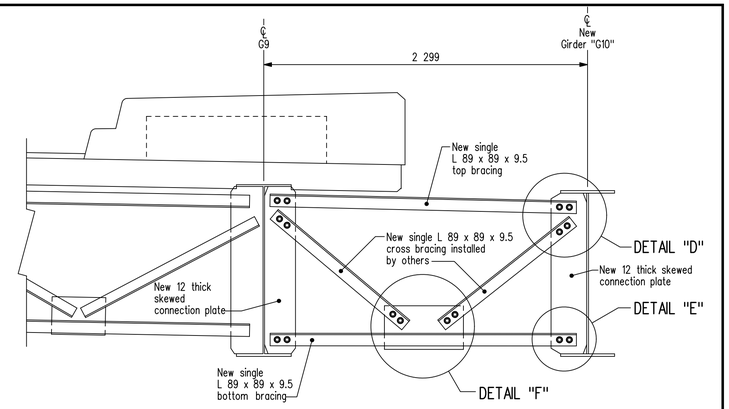

SECTION

Showing proposed K-frame bracing located between existing girder G9 and new girder G10 between piers and abutments. Shown normal to ℄ of bracing.

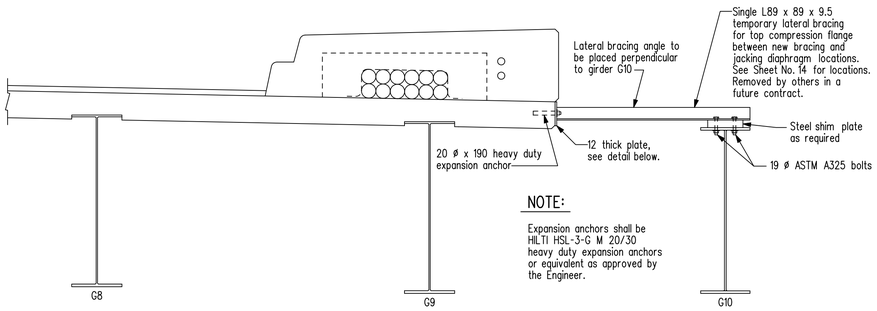

NOTE:

Expansion anchors shall be HILTI HSL-3-G M 20/30 heavy duty expansion anchors or equivalent as approved by the Engineer.

SECTION

Showing new girder "G10" temporary lateral bracing. Shown normal to ℄ of roadway.

NOTE:

The diagonal members for the new K-frame bracing are to be fabricated and supplied under this contract. They will be installed by others in a future contract.

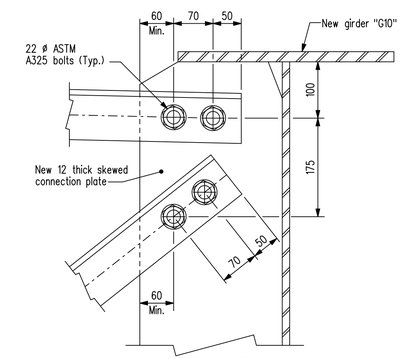

DETAIL "D"

Showing proposed bolted connections for new top and diagonal braces. Shown normal to ℄ of bracing. Scale 1 : 5

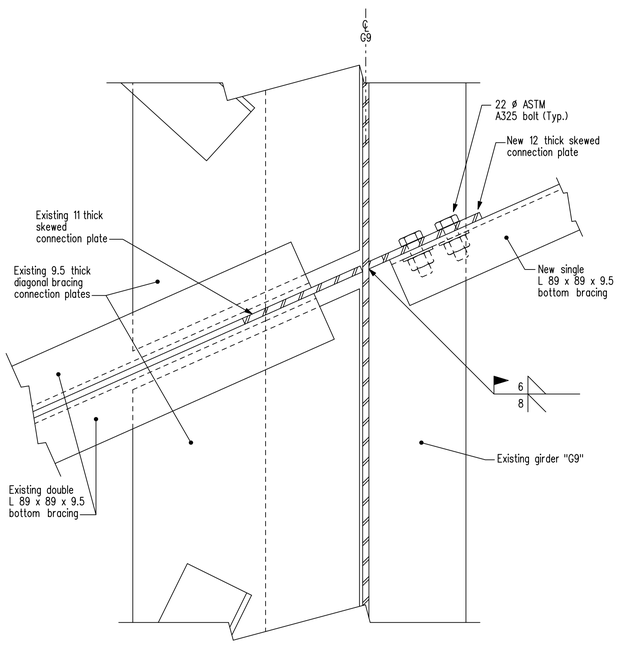

SECTION C-C

Showing girder "G9" new skewed connection plate and bottom brace alignment. Scale 1 : 5

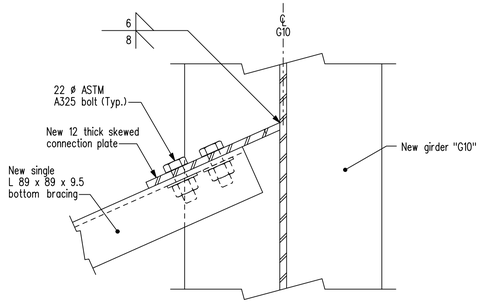

SECTION D-D

Showing new bottom brace connection to new girder "G10". Scale 1 : 5

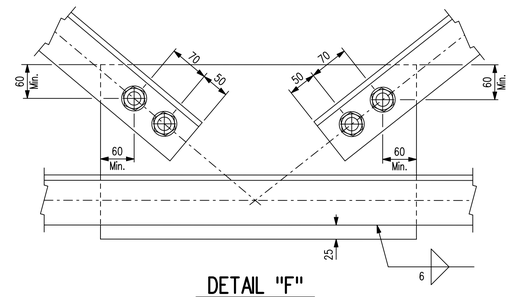

DETAIL "F"

Showing proposed connections for new bottom and diagonal braces. Shown normal to ℄ of bracing. Scale 1 : 5

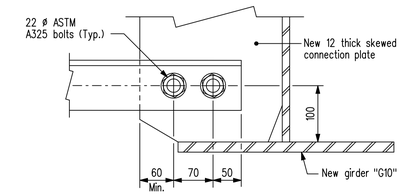

DETAIL "E"

Showing proposed bolted connection for new bottom brace. Shown normal to ℄ of bracing. Scale 1 : 5

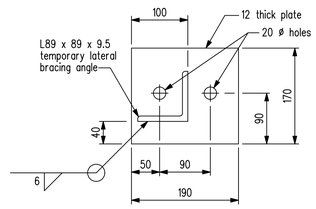

12 THICK PLATE

Showing new lateral brace connection plate Scale 1 : 5

REVISIONS		
10/03/04	J.J.	As built
DATE	BY	DESCRIPTION

PROVINCE OF MANITOBA
Original signed by
M. B. CHISLETT
09/04/20
REGISTERED PROFESSIONAL ENGINEER

INTERMEDIATE K-FRAME BRACING DETAILS

RECONSTRUCTION AND STRENGTHENING OF EXISTING BRIDGE OVER ASSINIBOINE RIVER - CONTRACT ONE ON P.T.H. No. 100 IN R.L.'S 72, 73 & 94 PARISH OF ST. CHARLES

CITY OF WINNIPEG

Manitoba
Infrastructure and Transportation
Water Control & Structures

RELEASED FOR CONSTRUCTION BY:
Original signed by
Ruth J. Eden
09/05/01
DIRECTOR — DATE
STRUCTURES, DESIGN AND CONSTRUCTION BRANCH

DESIGN	BY: M.B.C.	
	CHECKED: A.H.P.	
DETAILS	BY: D.P.W.	
	CHECKED: M.B.C.	

SCALE: 1 : 20 or As Shown
SHEET No. 25
SITE No. 2924-00

...\Contract_1\292400rehab.dgn 2010-03-04 3:15:56 PM