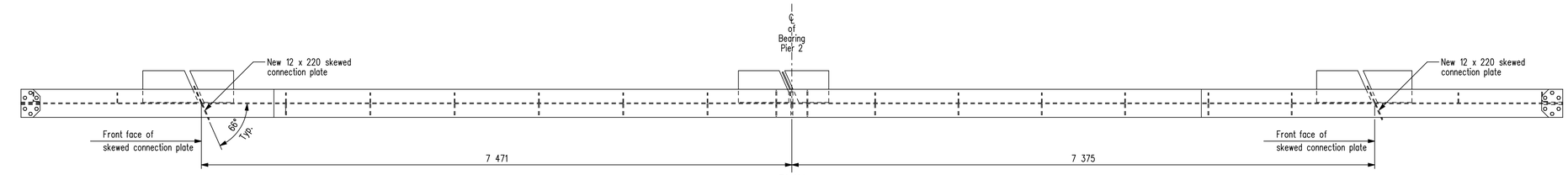

PLAN

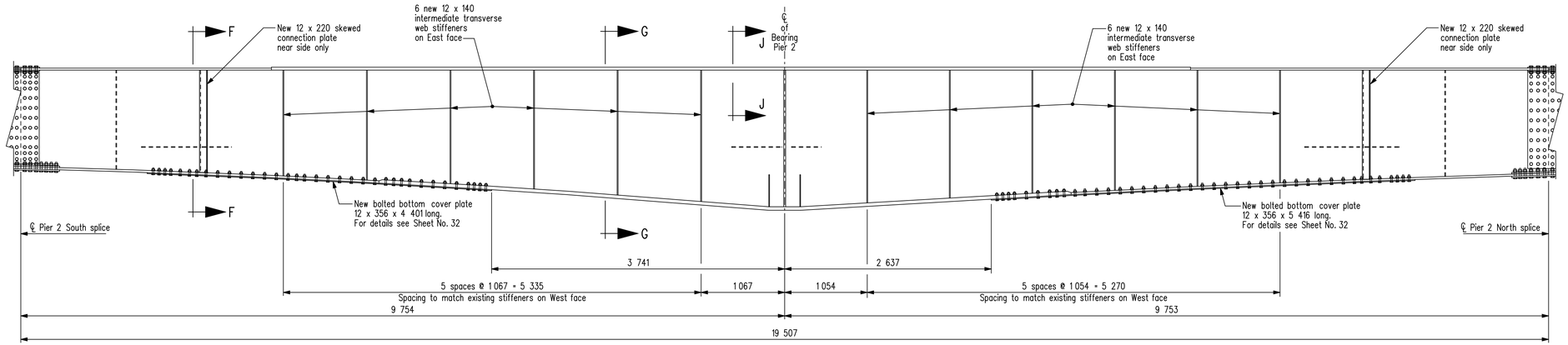

ELEVATION

PIER 2 SOUTH SPLICE TO PIER 2 NORTH SPLICE

Showing proposed modifications to existing girder Mk. "G9".

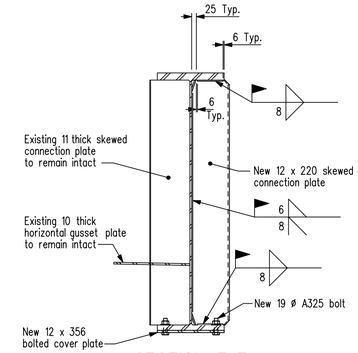

SECTION F-F

Showing new skewed connection plate and bolted cover plate.
Scale 1 : 15

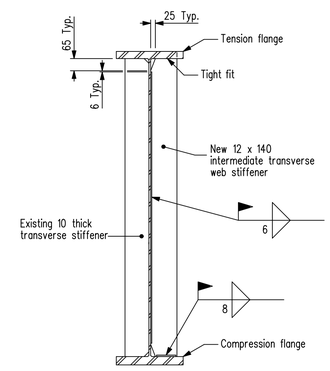

SECTION G-G

Showing new intermediate transverse web stiffeners added to outside face of existing girder G9 near Piers 2 & 3.
Scale 1 : 15

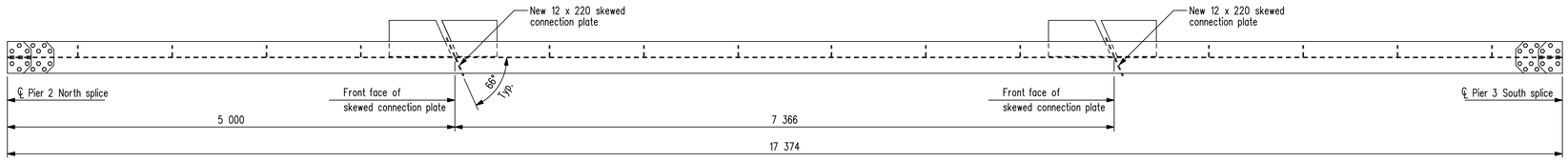

PLAN

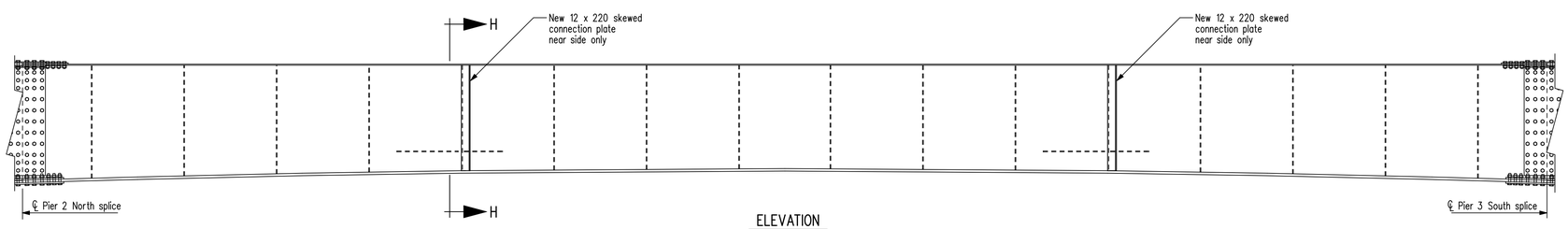

ELEVATION

PIER 2 NORTH SPLICE TO PIER 3 SOUTH SPLICE

Showing proposed modifications to existing girder Mk. "G9".

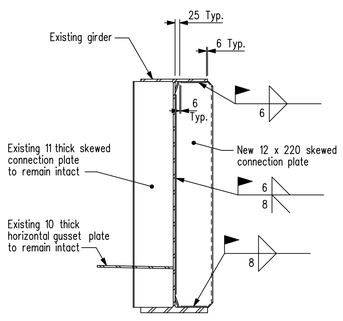

SECTION H-H

Showing new skewed connection plate.
Scale 1 : 15

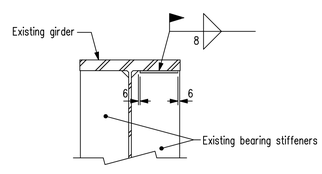

PART SECTION J-J

Showing top of exterior face bearing stiffener located at Piers 2 & 3 girder "G9" to be welded to underside of top flange.
Scale 1 : 10

REVISIONS		
10/03/04	J.J.	As built
DATE	BY	DESCRIPTION

PROVINCE OF MANITOBA
Original signed by
M. B. CHISLETT
09/04/20
REGISTERED PROFESSIONAL ENGINEER

MODIFICATIONS TO EXISTING GIRDER Mk. "G9"

RECONSTRUCTION AND STRENGTHENING OF EXISTING BRIDGE
OVER ASSINIBOINE RIVER - CONTRACT ONE
ON P.T.H. No. 100 IN R.L.'S 72, 73 & 94
PARISH OF ST. CHARLES

CITY OF WINNIPEG

Manitoba
Infrastructure and Transportation
Water Control & Structures

RELEASED FOR CONSTRUCTION BY:
Original signed by
Ruth J. Eden
09/05/01
DIRECTOR — DATE
STRUCTURES, DESIGN AND CONSTRUCTION BRANCH

DESIGN	BY: M.B.C.	SCALE: 1 : 30 or As Shown	SHEET No. 22
	CHECKED: M.W.H.		
DETAILS	BY: D.P.W.		SITE No. 2924-00
	CHECKED: M.B.C.		