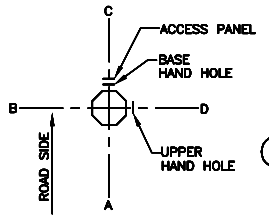

ORIENTATION

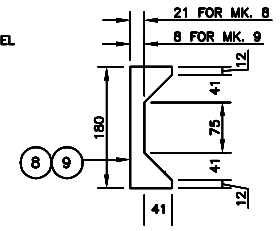

GUSSET PLATE
MK. 8 AND MK. 9

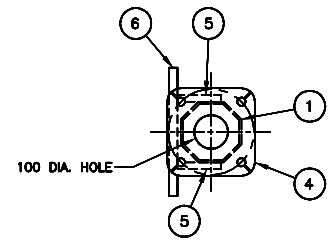

PLAN–TOP VIEW

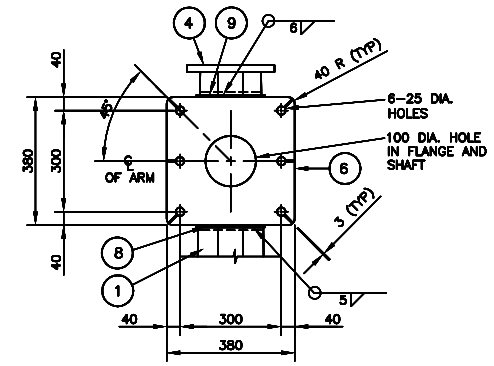

FRONT VIEW

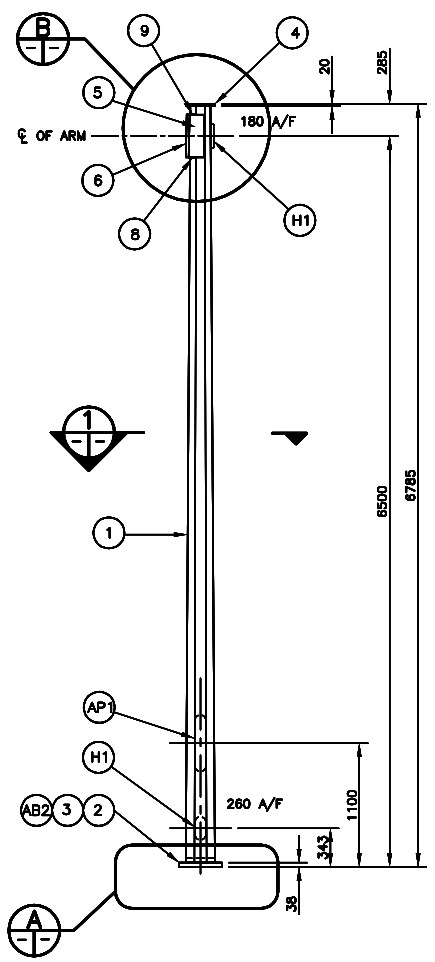

POLE ELEVATION
1:30
(STOCK CODE NO. 58523)

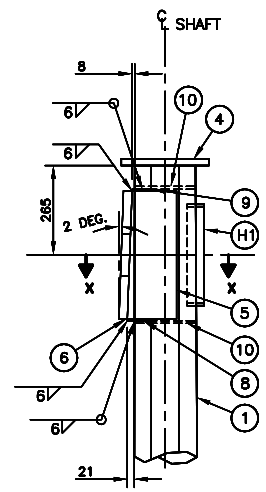

SIDE VIEW

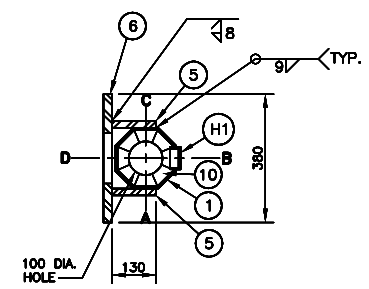

SECTION X–X

CONNECTION PLATE DETAIL (B)
1:10

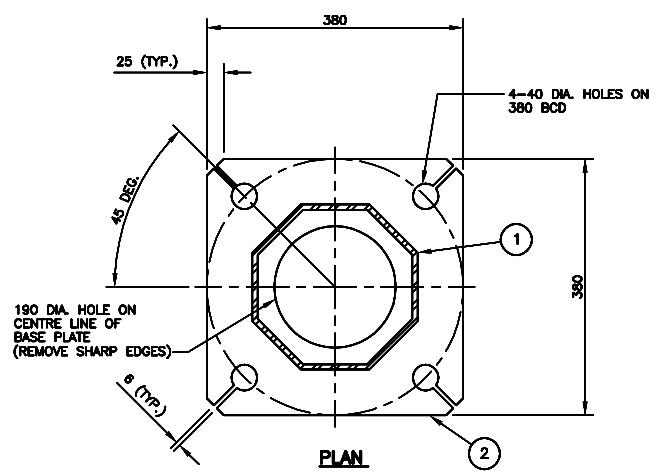

PLAN

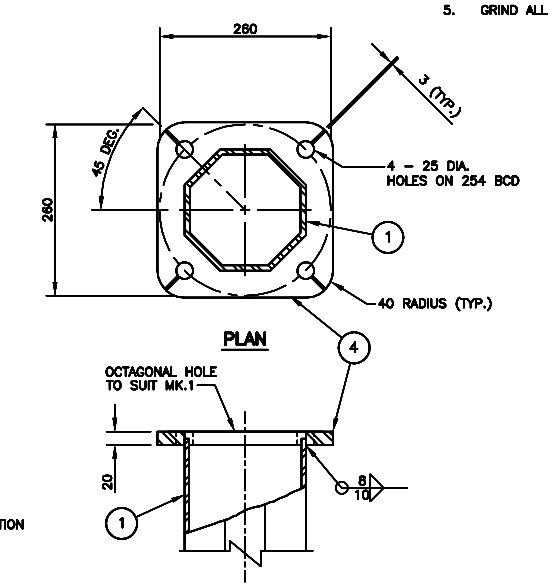

PLAN

SECTION

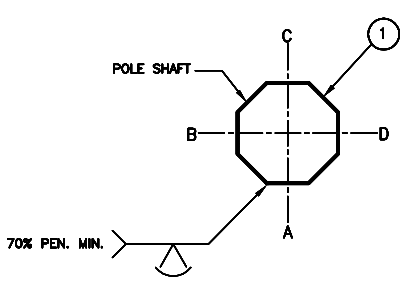

SECTION (1)
N.T.S.

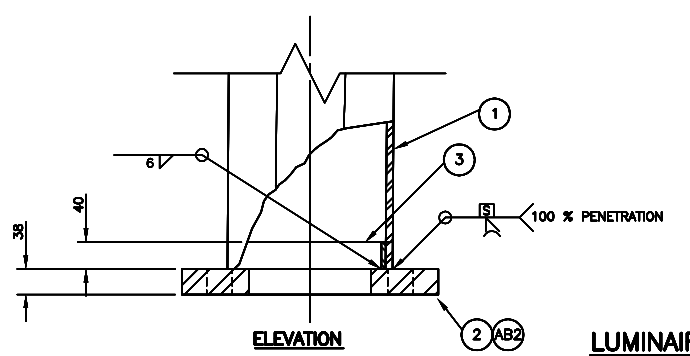

ELEVATION

BASE PLATE DETAIL (A)
1:5

LUMINAIRE ARM FLANGE PLATE DETAIL (C)
1:5

BILL OF MATERIALS

MK. NO.	QTY. REQ'D.	DESCRIPTION	SIZE	MATERIAL (G40.21–M–300W U/N)	REMARKS	LINE NO.
		MEDIUM SERIES VERTICAL SHAFT (#58523)				1
1	1	OCTAGONAL SECTION SHAFT	280 A/F – 180 A/F x 6.350			2
2	1	BASE PLATE	38 x 380 x 380			3
3	1	BACK–UP STRIP PLATE	6 x 40 x 816			4
4	1	LUMINAIRE FLANGE PLATE	20 x 260 x 260		SEE DETAIL C	5
5	2	SIDE PLATES	20 x 130 x 380			6
6	1	ARM FLANGE PLATE	25 x 380 x 380			7
7	4	NUT LOCK PLATE	4.7 x 38 x 82			8
8	1	BOTTOM GUSSET PLATE	10 x 62 x 180			9
9	2	TOP GUSSET PLATE	10 x 49 x 180			10
10	2	OCTAGONAL INTERIOR GUSSET PLATE	8 THICK			11
11	1	LUMINAIRE CAP PLATE	6.350 x 260 x 260			12
12	4	LUMINAIRE CAP PLATE BOLTS	22 DIA. x 64	ASTM A325	SEE DETAIL D	13
						14
AP1	1	ACCESS PANEL			SEE SHEET NO. S15	15
H1	2	HANDHOLE			SEE SHEET NO. S15	16
						17
AB2	4	ANCHOR BOLT ASSEMBLY	32 DIA x 1650	G40.1–M–300W	SUPPLIED BY OWNER SEE ANCHOR BOLT DWGS.	18
						19
						20

NOTES:

1. ALL MATERIALS, EXCEPT STAINLESS STEEL ITEMS, SHALL BE HOT DIP GALVANIZED IN ACCORDANCE WITH ASTM A123–09 (PLUS LATEST REVISIONS) WITH NET RETENTION OF 610 g/m^2
2. PROVIDE 'RAISED' STOCK CODE NUMBER WITH WELDING ELECTRODE.
3. SHIP WITH HANDHOLE COVERS & LUMINAIRE CAP PLATE C/W NUTS AND WASHERS INSTALLED.
4. RELATED COMPONENTS AND DRAWINGS :
   - EXTENSION ARM (E–016 J)
   - STRAIGHT STUB EXTENSION (E–016 D)
   - LUMINAIRE DAVIT ARM (E–016 E)
   - LUMINAIRE EXTENSION SHAFT (E–016 L)
   - HYDRO LUMINAIRE ADAPTOR (E–016 T)
5. GRIND ALL SHARP POINTS AND EDGES.

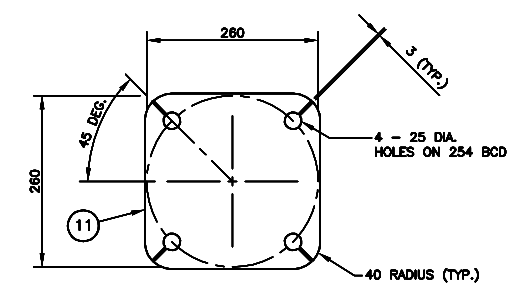

LUMINAIRE CAP PLATE
1:5

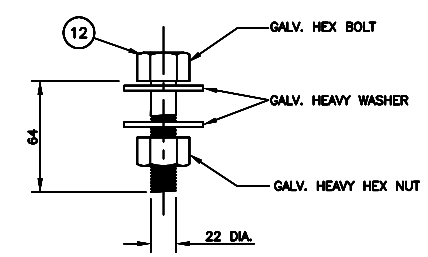

LUMINAIRE CAP PLATE BOLT DETAIL (D)
1:2

REVISIONS		
DATE	BY	DESCRIPTION

TRAFFIC SIGNAL
& PEDESTRIAN CORRIDOR STRUCTURES

MEDIUM SERIES
COMBINATION CANTILEVER
VERTICAL SHAFT

APEGM
Certificate of Authorization
Dillon Consulting Limited (MB)
No. 1789 Date: 04/03/2012

REDUCED DRAWING
N.T.S.

DILLON CONSULTING
CONSULTANT PROJECT NO.
11–5296

PROVINCE OF MANITOBA
ORIGINAL STAMPED BY
S.S. RIHAL
04/03/2012
REGISTERED PROFESSIONAL ENGINEER

Manitoba
Infrastructure and Transportation
Traffic Engineering

RELEASED FOR CONSTRUCTION BY:

DIRECTOR TRAFFIC ENGINEERING — DATE

DESIGN	BY: CDW	SCALE: AS SHOWN	COMPONENT No. E–016 H
	CHECKED: SSR		
DETAILS	BY: JGW		
	CHECKED: SSR		SHEET No. S7

G:\CAD\115296\CURRENT DWGS\S7_164.DWG, 03.01.2012