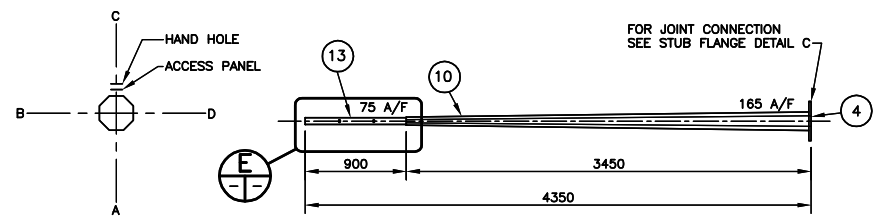

ORIENTATION

CORRIDOR ARM–MK.E2
SCALE: 1:30

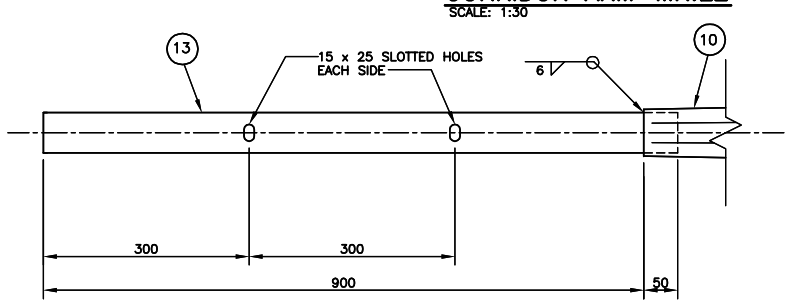

DETAIL E
SCALE: 1:5

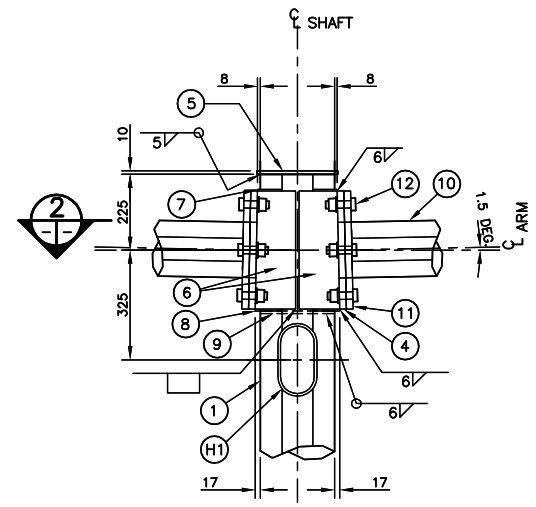

DETAIL B
SCALE: 1:10

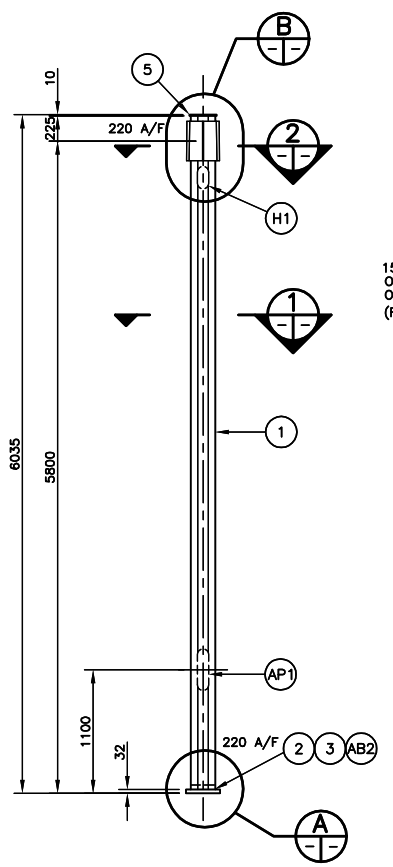

POLE ELEVATION–MK.E1
SCALE: 1:30

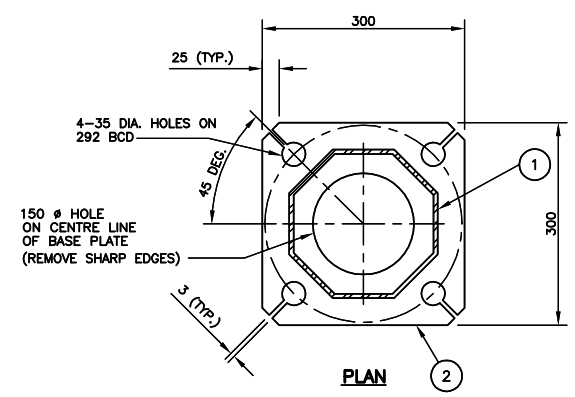

PLAN

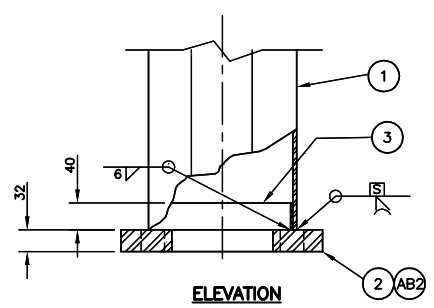

ELEVATION

BASE PLATE DETAIL A
SCALE: 1:5

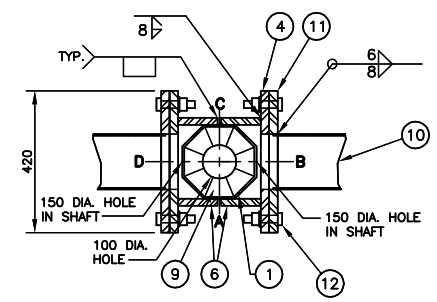

SECTION 2
SCALE: 1:10

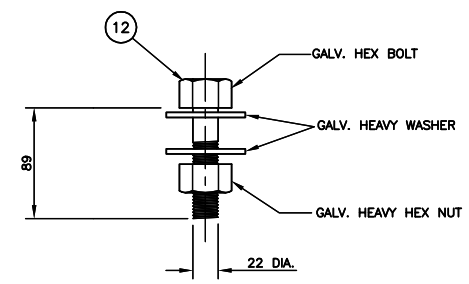

FLANGE BOLT DETAIL D
1:2

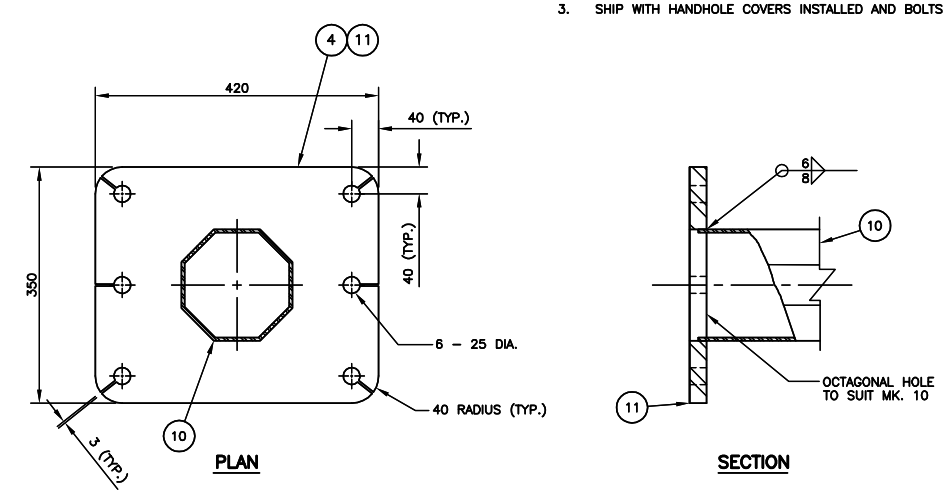

FLANGE PLATE DETAIL C
1:5

BILL OF MATERIALS

MK. NO.	QTY. REQ'D.	DESCRIPTION	SIZE	MATERIAL (G40.21–M–300W U/N)	REMARKS	LINE NO.
		DOUBLE CANTILEVER VERTICAL SHAFT MK.E1 (#58522)				1
1	1	OCTAGONAL SECTION SHAFT	220 A/F x 6.350			2
2	1	BASE PLATE	32 x 300 x 300			3
3	1	BACK–UP STRIP PLATE	6 x 40			4
4	2	STUB FLANGE PLATE	25 x 350 x 420			5
5	1	COVER PLATE	240 A/F x 10 THICK			6
6	4	SIDE GUSSET PLATE	20 x 122 x 350			7
7	2	TOP GUSSET PLATE	10 THICK			8
8	2	BOTTOM GUSSET PLATE	10 THICK			9
9	1	OCTAGONAL INTERIOR GUSSET PLATE	8 THICK			10
AP1	1	ACCESS PANEL			SEE SHEET NO. S15	11
H1	1	HAND HOLE			SEE SHEET NO. S15	12
AB2	4	ANCHOR BOLT ASSEMBLY	32 DIA. x 1650	G40.21–M–300W	SUPPLIED BY OWNER SEE ANCHOR BOLT DWGS.	13
						14
		4.5 m LONG CORRIDOR ARM MK.E2 (#58525)				15
10	2	OCTAGONAL SECTION SHAFT	165 A/F–75 A/F x 4.763			16
11	2	ARM FLANGE PLATE	25 x 350 x 420			17
12	12	FLANGE BOLTS	22 DIA. x 89	ASTM A325	SEE FLANGE BOLT DETAIL D	18
13	2	TENON PIPE	60.3 O.D. x 3.91	SCH.40, ASTM A53 GR. B		19
						20
						21

NOTES:

1. ALL MATERIALS, EXCEPT STAINLESS STEEL ITEMS, SHALL BE HOT DIP GALVANIZED IN ACCORDANCE WITH ASTM A123–09 (PLUS LATEST REVISIONS) WITH NET RETENTION OF 610 g/m^2
2. PROVIDE 'RAISED' STOCK CODE NUMBER WITH WELDING ELECTRODE.
3. SHIP WITH HANDHOLE COVERS INSTALLED AND BOLTS C/W NUTS AND WASHERS IN FLANGES.

APEGM
Certificate of Authorization
Dillon Consulting Limited (MB)
No. 1789 Date: 04/03/2012

REDUCED DRAWING
N.T.S.

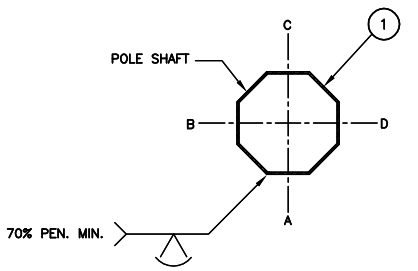

SECTION 1
N.T.S.

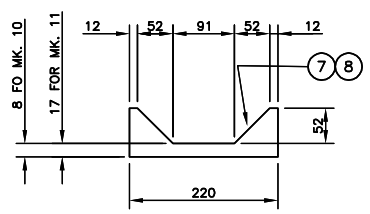

GUSSET PLATE
MARK 7 & 8

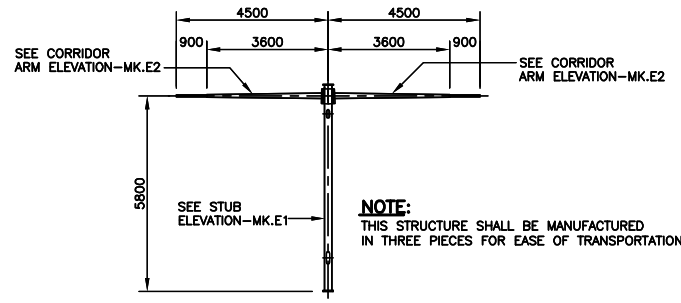

NOTE:
THIS STRUCTURE SHALL BE MANUFACTURED IN THREE PIECES FOR EASE OF TRANSPORTATION

KEY ELEVATION
SCALE: 1:100

REVISIONS		
DATE	BY	DESCRIPTION

PEDESTRIAN CORRIDOR STRUCTURE

MEDIUM SERIES DOUBLE CANTILEVER
VERTICAL SHAFT AND ARMS

DILLON CONSULTING
CONSULTANT PROJECT NO.
11–5296

PROVINCE OF MANITOBA
ORIGINAL STAMPED BY
S.S. RIHAL
04/03/2012
REGISTERED PROFESSIONAL ENGINEER

Manitoba
Infrastructure and Transportation
Traffic Engineering

RELEASED FOR CONSTRUCTION
BY:

DIRECTOR TRAFFIC ENGINEERING — DATE

DESIGN	BY: CDW	SCALE: AS SHOWN	COMPONENT No. E–016 Y
	CHECKED: SSR		
DETAILS	BY: JGW		
	CHECKED: SSR		SHEET No. S6

G:\CAD\115296\CURRENT DWGS\S6_16Y_NEW.DWG, 02.12.2011